January 29, 2020 4:54:14 p.m.
Drawing: H:\PROJ2019\20190241\DRAWINGS\LNA-FILS\PLB-P0.DWG
Xrefs: MAS-BORD.DWG,

THE USE OF THESE PLANS AND SPECIFICATIONS SHALL BE RESTRICTED TO THE ORIGINAL SITE FOR WHICH THEY WERE PREPARED AND PUBLICATION THEREOF IS EXPRESSLY LIMITED TO SUCH USE. RE-USE, REPRODUCTION, OR PUBLICATION BY ANY METHOD, IN WHOLE OR IN PART, IS PROHIBITED. TITLE TO THE PLANS AND SPECIFICATIONS REMAINS WITH THE ENGINEER WITHOUT PREJUDICE. VISUAL CONTACT WITH THESE PLANS AND SPECIFICATIONS SHALL CONSTITUTE PRIMA FACIE EVIDENCE OF THE ACCEPTANCE OF THESE RESTRICTIONS. AXIOM ENGINEERS INC. CONSULTING MECHANICAL ENGINEERS

PLUMBING SPECIFICATION

1. SCOPE: PROVIDE PLUMBING SYSTEMS, INCLUDING ALL LABOR, EQUIPMENT, MATERIALS AND SERVICES.
2. COORDINATION: COORDINATE WITH GENERAL CONTRACTOR AND ALL OTHER TRADES.
3. CODES: THIS WORK SHALL CONFORM TO ALL LOCAL CODES, CALIFORNIA BUILDING CODE, CALIFORNIA MECHANICAL CODE AND CALIFORNIA PLUMBING CODE.
4. FEES: CONTRACTOR SHALL PAY ALL FEES IN CONNECTION WITH THIS WORK. CONNECTION CHARGES BY OWNER.
5. DRAWINGS: DRAWINGS ARE SCHEMATIC. ALL EQUIPMENT LOCATIONS SHALL BE VERIFIED IN THE FIELD AND APPROVED BY ARCHITECT.
6. CUTTING: REPAIR ALL SURFACES CUT IN THIS WORK TO MATCH ORIGINAL. NO CUTTING OF STRUCTURAL ELEMENTS IS ALLOWED WITHOUT PRIOR WRITTEN CONSENT OF THE STRUCTURAL ENGINEER.
7. MAINTENANCE: ALL EQUIPMENT SHALL BE ACCESSIBLE FOR MAINTENANCE.
8. GUARANTEE: ALL WORKMANSHIP, EQUIPMENT AND MATERIALS SHALL BE GUARANTEED FOR ONE YEAR AFTER DATE OF ACCEPTANCE.
9. SUBMITTALS: WITHIN 15 DAYS AFTER SIGNING A CONTRACT, PROVIDE SUBMITTALS ON ALL PLUMBING EQUIPMENT.
10. STRUCTURAL: CONTRACTOR SHALL CONSULT AND OBTAIN DIRECTION FROM THE STRUCTURAL ENGINEER ON STRUCTURAL SUPPORT OF ALL PLUMBING EQUIPMENT.
11. TESTING, ADJUSTING, AND CLEANING: TEST ALL PIPING, VALVES, CLEAN OUTS, ETC. AS LISTED BELOW AND PROVIDE THE ARCHITECT WITH CERTIFIED COPIES OF TEST RESULTS. THE INSPECTION AUTHORITY HAVING JURISDICTION AND THE SUPERVISING ARCHITECT SHALL BE NOTIFIED AT LEAST 24 HOURS PRIOR TO PERFORMANCE OF ALL TESTS SO THAT THEY MAY BE WITNESSED.

    ALL WATER PIPING SHALL BE TESTED TO 100 PSIG WITH POTABLE WATER AND HELD FOR 2 HOURS WITHOUT DROP IN PRESSURE BEFORE IT IS COVERED AND CONCEALED. EQUIPMENT AND PERSONNEL SHALL BE PROTECTED FROM THIS TEST PRESSURE.

    ALL GAS PIPING SHALL BE TESTED AT 60 PSIG FOR 2 HOURS WITHOUT DROP IN PRESSURE. EQUIPMENT AND PERSONNEL SHALL BE PROTECTED FROM THIS TEST PRESSURE.

    ALL PARTS OF THE SOIL, WASTE AND DRAINAGE SYSTEM SHALL BE TESTED HYDRAULICALLY BY FILLING TO THE HIGHEST VENT POINT WITH WATER. PIPING MAY BE TESTED IN SECTIONS BUT SHALL BE SUBJECTED TO A HEAD NOT LESS THAN 10 FEET. STAND PIPE INSTALLED FOR A HEAD TEST SHALL BE 2 INCH MINIMUM. TEST PRESSURE SHALL BE HELD FOR 15 MINUTES BEFORE INSPECTION STARTS AND WATER LEVEL SHALL REMAIN STATIONARY FOR NOT LESS THAN 1 HOUR.

    ADJUST AND REGULATE ALL FAUCETS, VALVES, WATER HEATING EQUIPMENT, ETC. AND TURN OVER TO THE OWNER IN PERFECT WORKING ORDER.

    FLOOR DRAIN STRAINERS AND CLEAN OUT COVERS SHALL BE FREED, CLEANED AND POLISHED.

    UPON COMPLETION OF THE WORK, CLEAN ALL EQUIPMENT AND PIPING INSTALLED UNDER THIS SECTION AND THOROUGHLY WASH AND POLISH ALL PLUMBING FIXTURES, FITTINGS AND TRIM, REMOVING LABELS THEREFROM.
12. VERIFICATION OF EXISTING CONDITIONS: IT SHALL BE ONE OF THE RESPONSIBILITIES UNDER THIS SECTION TO EXAMINE THE SITE OF WORK AND, AFTER INVESTIGATION, TO DETERMINE THE CHARACTER OF THE MATERIALS TO BE ENCOUNTERED AND THE EXISTING CONDITIONS AFFECTING THE WORK.
13. EXCAVATION AND BACKFILLING: EXCAVATION SHALL BE UNCLASSIFIED AND SHALL INCLUDE THE REMOVAL OF ALL BURIED OBSTRUCTIONS WITHIN THE AREA TO BE EXCAVATED. TRENCH TO REQUIRED DEPTHS. TRENCH TO BE FREE OF WATER.

    TAMP BOTTOM OF TRENCH. EXCAVATE BELL HOLES SO PIPE SHALL REST FOR ENTIRE LENGTH ON SOLID GROUND. REMOVE ALL ROCKS AND TAMP AND COMPACT 1/2" TO 1 1/2" BROKEN STONE OR GRAVEL SAND ON BOTTOM OF TRENCH BEFORE LAYING PIPE. INSTALLED PIPING TO BE TESTED, INSPECTED AND APPROVED FOR BACKFILL MATERIAL. MATERIAL: IMPORTED SANDY SOIL IN LAYERS NOT EXCEEDING 8". MOISTEN AND MACHINE TAMP TO ORIGINAL CONDITION. BACKFILL SHALL BE COMPACTED TO A DENSITY OF 95% AS DETERMINED BY THE LABORATORY TEST PROCEDURE IN ASTM D1557.
14. STERILIZATION: BEFORE BEING PLACED IN SERVICE, ALL DOMESTIC COLD WATER DISTRIBUTION SYSTEMS SHALL BE STERILIZED IN ACCORDANCE WITH THE AWWA STANDARD SPECIFICATION, LATEST EDITION AND AMENDMENTS. AFTER STERILIZATION, THE SYSTEM SHALL BE FLUSHED WITH POTABLE WATER UNTIL THE STERILIZATION RESIDUE IS WITHIN THE TOLERABLE LIMITS FOR DOMESTIC WATER.
15. MATERIALS: SOIL, WASTE, DRAIN AND VENT (ABOVE AND BELOW GROUND) SHALL BE ABS-DVW (SDR-35) PER ASTM 2751 AND SHALL BE IAPMO APPROVED WITH SOLVENT WELD SOCKET FITTINGS.

    WATER PIPING: HARD COPPER WATER TUBE, CONFORMING TO ASTM B88 TYPE "L" ABOVE GROUND, WITH WROUGHT COPPER FITTINGS. PEX TUBING IS AN ACCEPTABLE SUBSTITUTION FOR 1"ø AND SMALLER PIPING.

    PIPE INSULATION: INSULATE ALL DOMESTIC HOT WATER AND HOT WATER RETURN PIPING WITH FIBERGLASS 1 INCH NOMINAL THICKNESS OWENS-CORNING TYPE ASJ STAPLED IN PLACE WITH VAPOR BARRIER. ALL ELBOWS AND FITTINGS SHALL BE FACTORY PRE FABRICATED PVC COVERS. ON ALL EXPOSED HOT WATER DROPS, COVER INSULATION WITH PVC COVERING AND SEAL PER MANUFACTURER'S RECOMMENDATIONS.

    GAS PIPING: STANDARD WEIGHT BLACK STEEL PIPE, SCHEDULE 40, A-53 WITH 150# BLACK MALLEABLE IRON FITTINGS.
16. ADHESIVES, SEALANTS AND CAULKS USED INDOORS SHALL NOT EXCEED THE FOLLOWING VOC LIMITS PER TITLE 24, PART 11, SECTION 5.504.
    - PVC WELDING < 510 G/L
    - CPVC WELDING < 490 G/L
    - ABS WELDING < 325 G/L
    - MASTICS > 100 G/L
    - ZINC-RICH PRIMERS < 340 G/L
    - FIRE RESISTANT COATINGS < 350 G/L
17. PLUMBING FIXTURES SHALL NOT EXCEED THE MAXIMUM FLOW AT 20% REDUCTION RATES LISTED IN TABLE 5.303.2.3 OF TITLE 24, PART 11.

GENERAL NOTES :

1. THIS PROJECT IS A REMODEL. THE PLANS AND SPECIFICATIONS INDICATE THE GENERAL EXTENT OF THE WORK BASED ON OWNER PROVIDED RECORD DRAWINGS AND LIMITED FIELD VERIFICATION. CONTRACTOR SHALL VISIT SITE, VERIFY EXISTING CONDITIONS, AND REPORT ANY DISCREPANCIES NOTED TO THE ARCHITECT PRIOR TO SUBMITTING A BID. CONTRACTOR SHALL BE RESPONSIBLE FOR THE DISCONNECTION AND RECONNECTION OF MECHANICAL, PLUMBING, AND ELECTRICAL SYSTEMS NECESSARY TO ACCOMPLISH THE WORK WHETHER OR NOT SPECIFIED AND/OR INDICATED.
2. ASBESTOS ABATEMENT BY OTHERS ON THIS PROJECT. ANY REQUIRED ASBESTOS ABATEMENT WORK WILL BE PROVIDED BY OTHERS. AREAS SUSPECTED OF ASBESTOS CONTAMINATION WHICH INTERFERE WITH WORK UNDER THIS PROJECT SHALL BE IDENTIFIED DURING THE EARLY PHASES OF CONSTRUCTION IN ORDER TO PROVIDE FOR TIMELY DISPOSITION. NO DELAYS IN CONSTRUCTION SCHEDULE WILL BE ALLOWED DUE TO IMPROPER COORDINATION.
3. PLUMBING CONTRACTOR SHALL NOTIFY GENERAL CONTRACTOR TO REPAIR WALL, FLOOR, AND CEILING SURFACES AS REQUIRED DUE TO DEMOLITION OR INSTALLATION WORK.
4. REMOVE ALL ABANDONED PIPING, EQUIPMENT, AND FIXTURES INTERFERING WITH NEW WORK WHETHER NEW WORK IS ARCHITECTURAL, STRUCTURAL, MECHANICAL, OR ELECTRICAL.
5. ABANDON IN PLACE ALL PIPING NOT INTERFERING WITH NEW WORK UNLESS REQUIRED FOR CONTINUED SERVICE.
6. CONTRACTOR SHALL SAW-CUT SLAB AS REQUIRED FOR INSTALLATION OF WASTE AND VENT PIPING BELOW FLOOR.
7. CUTTING OR CORING OF STRUCTURAL MEMBERS OR FOOTINGS IS PROHIBITED WITHOUT THE PRIOR WRITTEN CONSENT OF THE STRUCTURAL ENGINEER AND THE ARCHITECT.
8. CONTRACTOR SHALL VERIFY THAT THE ELECTRICAL CONNECTIONS TO THE UNITS, INCLUDING CIRCUIT PROTECTION, CONFORM TO UNIT LABELS AND MANUFACTURER'S DIRECTIONS. WHERE WIRE SIZES SHOWN ON DRAWING EXCEED MANUFACTURER'S RECOMMENDATIONS, THE DRAWINGS SHALL GOVERN. ALL WIRING SHALL BE PER THE NATIONAL ELECTRICAL CODE.
9. ALL CONTROL WIRING SHALL BE IN CONDUIT. CONDUIT SHALL BE PROVIDED AND INSTALLED BY THE PLUMBING CONTRACTOR.
10. FLASHING AND WEATHERPROOFING AT EXTERIOR PENETRATIONS ARE SHOWN ON THE ARCHITECTURAL DRAWINGS.
11. COORDINATE WITH OWNER ON SPACE REQUIRED AND TIME SCHEDULE FOR DELIVERY OF ALL ITEMS WHICH ARE TO BE GIVEN TO THE OWNER FOR HIS DISPOSITION.
12. FOR ROOF PENETRATIONS WITHOUT CURBS, PROVIDE WEATHERPROOF FLASHING PER SMACNA ARCHITECTURAL SHEET METAL MANUAL AND DRAWING NOTES.
13. LABEL ALL PIECES OF EQUIPMENT WITH MARK MATCHING SCHEDULE OR EQUIPMENT LIST WITH ENGRAVED PLASTIC LABELS WITH MINIMUM 1/4" HIGH LETTERS. LABELS EXPOSED TO WEATHER SHALL BE ENGRAVED BRASS.
14. PRIME AND PAINT ALL EXPOSED PIPING PER ARCHITECTURAL SPECIFICATIONS. PAINT SHALL NOT EXCEED THE FOLLOWING VOLATILE ORGANIC COMPOUND CONTENT LIMITS: FLATS < 50 GRAMS PER LITER, NON-FLATS < 100 GRAMS PER LITER.
15. COORDINATE WITH ELECTRICAL ON REQUIRED POWER OUTLETS AND LIGHT SWITCHES NEAR PLUMBING EQUIPMENT.
16. BRACE ALL GAS PIPING THAT IS 1" NOMINAL OR LARGER. BRACE ALL PIPING IN MECHANICAL ROOMS THAT IS 1 1/4" NOMINAL OR LARGER. BRACE ALL PIPING 2 1/2" NOMINAL OR LARGER. PIPING SUSPENDED BY INDIVIDUAL HANGERS 12" OR LESS IN LENGTH, AS MEASURED FROM THE TOP OF THE PIPE TO THE BOTTOM OF THE SUPPORT WHERE THE HANGER IS ATTACHED, NEED NOT BE BRACED.
17. ALL PIPING, VALVES, EQUIPMENT, ETC. SHOWN IS NEW UNLESS OTHERWISE NOTED.

WATER HEATER

MARK	LOCATION	GAL CAP	MBH IN	ELECT kW	ELECT V/PH	RECOVERY @ 60°F RISE	FULL WT	MAKE & MODEL	REMARKS
WH-1	JANITORS	80	199	-	-	205 GPH	1201	BRADFORD WHITE UCG-80H-199-3N	(1) (2)

(1) SEE 2/P-6
(2) 120°F LWT, 81% THERMAL EFFICIENCY

GREASE INTERCEPTOR

MARK	TYPE	CAPACITY/ PIPE SIZE	MAKE & MODEL	REMARKS
GI-1	HYDRO MECHANICAL	250 GALLONS / 4"ø	SCHIER, GREAT BASIN MODEL GB-250	(1) (2)

(1) FURNISH WITH MODEL SR24 RISERS AND MODEL C24HP COVERS
(2) INSTALL PER MANUFACTURER'S INSTRUCTIONS, SEE P-3

PLUMBING FIXTURE CONNECTIONS

MARK	DESCRIPTION	MIN BRANCH SIZE				TRAP	REMARKS
		W	V	CW	HW		
L-1	UNDERCOUNTER MOUNTED LAVATORY	1 1/2"	1 1/2"	1/2"	1/2"	1 1/2"	(5)
SH-1	SHOWER	-	-	1/2"	1/2"	-	(2)
SH-2	SHOWER	-	-	1/2"	1/2"	-	(2) (5)
BT-1	BATH TUB	2"	1 1/2"	1/2"	1/2"	2"	(5)
WC-1	FLOOR MOUNTED WATER CLOSET	3"	2"	1"	-	INTEGRAL	(5)
WC-2	FLOOR MOUNTED WATER CLOSET	3"	2"	1"	-	INTEGRAL	
MS-1	MOP SINK	2"	1 1/2"	1/2"	1/2"	2"	
CWB-1	CLOTHES WASHER BOX	2"	1 1/2"	1/2"	1/2"	2"	(3)
HB-1	HOSE BIBB	-	-	3/4"	-	-	(6)
FD-1	FLOOR DRAIN	2"	1 1/2"	-	-	2"	(1)
FS-1	FLOOR SINK	2"	1 1/2"	-	-	-	(4)

(1) FLOOR DRAIN, JAY R. SMITH FIGURE 2005Y-A FLOOR DRAIN. 5" ROUND TOP, CHROME STRAINER.
(2) TILE ENCLOSURE, SEE ARCHITECT'S DRAWINGS
(3) GUY GRAY PRODUCT #82327, CENTER DRAIN, STAINLESS STEEL WASHING MACHINE OUTLET BOX, WITH SWEAT ARRESTER VALVES.
(4) FLOOR SINK ZURN MODEL ZFD2375, 12" x 12" x 6" A.R.E. FLOOR SINK, 6" SUMP DEPTH, TOP OF SINK FLUSH WITH FLOOR.
(5) MUST MEET ALL STATE OF CALIFORNIA REQUIREMENTS FOR ACCESSIBILITY
(6) ACORN, 8126-LF, LEAD FREE WITH NON-REMOVABLE VACUUM BREAKER

PLUMBING FIXTURE SPECIFICATION

FIXTURES SHALL BE COMPLETE WITH ALL FITTINGS, SUPPORTS, FASTENING DEVICES, FAUCETS, VALVES, 17 GAUGE TRAPS, STOPS, CAULKING AND APPURTENANCES REQUIRED. FIXTURE COLOR SHALL BE WHITE, UNLESS OTHERWISE NOTED.

1. LAVATORY L-1: KOHLER "LADERA" K-2214. UNDERCOUNTER MOUNT, 4" CENTERS. MUST MEET CALIFORNIA REQUIREMENTS FOR ADA.
   FAUCET: CHICAGO FAUCETS, MANUAL FAUCETS MODEL 2200-4E2805ABCP. DECK MOUNTED 4" FIXED CENTERS, .35 GPM VANDAL PROOF NON-AERATING SPRAY.
   THERMOSTATIC MIXING VALVE: CHICAGO FAUCETS MODEL 122-ABNF, INTEGRAL CHECK VALVE, ADJUSTMENT CAP WITH LOCK, THERMOSTAT CONTROLS BOTH HOT AND COLD WATER SUPPLIES, INLET FILTER
   DRAIN: KOHLER MODEL K-7129-A GRID DRAIN.
   P-TRAP: McGUIRE MODEL 8902CB
   SUPPLY & STOPS: McGUIRE MODEL LFH2165LKN3 D
   DRAIN COVER: McGUIRE "PROWRAP", MODEL PW2000WC
2. SHOWER SH-1: DELTA MODEL T13H333. TRIM ONLY. 1.5 GALLONS PER MINUTE. DUAL SHOWER UNIT WITH 24" SS BAR WITH ADA SLIDE HANDSHOWER & SHOWER DIVERTER VALVE.
3. SHOWER SH-2: DELTA MODEL T13H333. TRIM ONLY. 1.5 GALLONS PER MINUTE. DUAL SHOWER UNIT WITH 24" SS BAR WITH ADA SLIDE HANDSHOWER & SHOWER DIVERTER VALVE. MUST MEET CALIFORNIA REQUIREMENTS FOR ADA.
4. BATH TUB BT-1: KOHLER "VILLAGER" MODEL K-716, 60"L x 30 1/4"W, CAST IRON, INTEGRAL APRON. PROVIDE K-7160 BATH DRAIN SHOWER/TUB TRIM: SYMMONS "ORIGINS" MODEL S-9602-P-1.2-VP-X, 1.2 GPM, VANDAL RESISTANT, INTEGRAL STOPS
5. WATER CLOSET WC-1: KOHLER "HIGHCLIFF ULTRA", MODEL K-96057-SS. ELONGATED BOWL. 1.28 GPF, 17 1/8" RIM HEIGHT. MUST MEET CALIFORNIA REQUIREMENTS FOR ADA.
   SEAT: CENTOCO OPEN FRONT TOILET SEAT, 1500STSCC.
   FLUSH VALVE: SLOAN 111-1.28.
6. WATER CLOSET WC-2: KOHLER "WELLCOMME ULTRA", MODEL K-96053-SSL. ELONGATED BOWL. 1.28 GPF, 15 1/2" RIM HEIGHT.
   SEAT: CENTOCO OPEN FRONT TOILET SEAT, 1500STSCC.
   FLUSH VALVE: SLOAN 111-1.28.
7. MOP SINK MS-1: KOHLER "WHITBY" MODEL K-6710 SERVICE SINK, CAST IRON, FLOOR MOUNTED, CORNER BASIN.
   FAUCET: KOHLER MODEL K-8907, SERVICE SINK FAUCET WITH VACUUM BREAKER. WALL BRACE.
   DRAIN: KOHLER MODEL K-9142, 2" SERVICE SINK STRAINER.

2019 CALGREEN NON-RESIDENTIAL MANDATORY MEASURES:

PLUMBING FIXTURES AND FITTINGS SHALL COMPLY WITH THE FOLLOWING:
5.303.3.1 WATER CLOSETS: ≤1.28 GAL/FLUSH
5.303.3.2 URINALS: ≤0.125 GAL/FLUSH
5.303.3.3.1 SINGLE SHOWERHEADS: ≤1.8 GPM AT 80 PSI
5.303.3.3.2 MULTIPLE SHOWERHEADS: COMBINED FLOW RATE OF ALL SHOWERHEADS AND/OR OTHER SHOWER OUTLETS CONTROLLED BY A SINGLE VALVE SHALL NOT EXCEED 1.8 GPM AT 80 PSI OR ONLY ONE SHOWERHEAD IS TO BE IN OPERATION AT A TIME.
5.303.3.4.1 NON-RESIDENTIAL LAVATORY FAUCETS: ≤0.5 GPM AT 60 PSI
5.303.3.4.2 KITCHEN FAUCETS: ≤1.8 GPM AT 60 PSI; TEMPORARY INCREASE TO 2.2 GPM ALLOWED BUT SHALL DEFAULT TO 1.8 GPM
5.303.3.4.3 WASH FOUNTAINS: ≤1.8 GPM/20 [RIM SPACE (INCHES) AT 60 PSI]
5.303.3.4.4 METERING FAUCETS: ≤0.20 GALLONS PER CYCLE
5.303.3.4.5 METERING FAUCETS FOR WASH FOUNTAINS: ≤0.20 GALLONS PER CYCLE 20 [RIM SPACE (INCHES) AT 60 PSI]

NOTE: WHERE COMPLYING FAUCETS ARE UNAVAILABLE, AERATORS OR OTHER MEANS MAY BE USED TO ACHIEVE REDUCTION.

PLUMBING LEGEND

SYMBOL	ABBRV.	IDENTIFICATION	ABBRV.	IDENTIFICATION
	CW	COLD WATER (DOMESTIC)	COORD	COORDINATE
	HW	HOT WATER	DN	DOWN
	HWR	HOT WATER RETURN	DWGS	DRAWINGS
	V	VENT	(E)	EXISTING
G	G	GAS (7"WC)	MIN	MINIMUM
W	S OR W	SOIL OR WASTE ABOVE GRADE	(N)	NEW
W	S OR W	SOIL OR WASTE BELOW GRADE	VTR	VENT THROUGH ROOF
		RISE UP	W/	WITH
	ELL	ELBOW DOWN		
	TEE	TEE DOWN		
		CAP		
	CONT	CONTINUATION		
		BALL VALVE		
		UNION		
	WHA	WATER HAMMER ARRESTOR		
	HB	HOSE BIBB		
	GCO/FCO	GRADE CLEAN-OUT/FLOOR CLEAN-OUT		
	WCO	WALL CLEAN-OUT		
		THERMOMETER		
	POC	POINT OF CONNECTION		

KITCHEN FIXTURE CONNECTIONS ROUGH-IN

MARK	DESCRIPTION	MIN BRANCH SIZE						GAS MBH	REMARKS
		ID	W	V	CW	HW	G		
1	3 COMPARTMENT SINK	2"	-	-	-	-	-	-	(1) (2)
2	SPRAY HOSE	-	-	-	1/2"	1/2"	-	-	(1)
5	UNDER COUNTER DISHWASHER	2"	-	-	-	3/4"	-	-	(1) (2)
13	GAS RANGE	-	-	-	-	-	1"	143	(1)
15	HAND SINK	2"	-	-	-	-	-	-	(1) (2)
16	FAUCET	-	-	-	1/2"	1/2"	-	-	(1)
20	PREP SINK	2"	-	-	-	-	-	-	(1) (2)
21	FAUCET	-	-	-	1/2"	1/2"	-	-	(1)
29	WATER FILTER	-	-	-	1/2"	-	-	-	(1) (3)

(1) CONNECT NEW FIXTURE TO NEW DOMESTIC WATER, WASTE, VENT AND GAS PIPING. SIZE NEW PIPING CONNECTIONS PER FIXTURE SCHEDULE. CONTRACTOR SHALL VERIFY POINTS OF CONNECTION FOR PIPING PRIOR TO STARTING WORK.
(2) INDIRECT DRAIN TO FS-1
(3) IN-LINE WATER FILTER TO 28, 30 AND 32

FOOD SERVICE EQUIPMENT NOTES

1. ALL EQUIPMENT LOCATIONS AND RELATED ROUGH-IN REQUIREMENTS SHOWN ON PLANS ARE APPROXIMATE ONLY. CONTRACTOR SHALL VERIFY WITH OWNER AND FOOD SERVICE CONSULTANT ALL REQUIREMENTS, INCLUDING FLOOR SINK LOCATIONS, ETC. PRIOR TO BEGINNING WORK.
2. CONTRACTOR SHALL ROUGH-IN AND FURNISH FINAL CONNECTIONS TO ALL EQUIPMENT SHOWN WITH SHUT-OFF VALVES AND UNIONS.
3. ALL FLOOR SINKS SHOWN SHALL BE FURNISHED AND INSTALLED WITH RIM FLUSH WITH FINISHED FLOOR, UNLESS NOTED OTHERWISE.
4. ALL EQUIPMENT REQUIRING CONDENSATE CONNECTIONS SHALL BE FURNISHED WITH P-TRAPS PER MANUFACTURER'S REQUIREMENTS AT THE POINT OF CONNECTION TO THE COIL DRAIN PANS.
5. ALL PIPING SHOWN SHALL BE RUN CONCEALED IN WALLS, ABOVE CEILING, OR UNDER SLAB, UNLESS NOTED OTHERWISE.
6. PLUMBING CONTRACTOR SHALL PROVIDE AND INSTALL INDIRECT DRAINS TO FLOOR SINKS FOR ALL FOOD SERVICE EQUIPMENT REQUIRING DRAIN CONNECTIONS WITH INDIRECT DRAINS TO FLOOR SINKS.
7. ALL FOOD SERVICE EQUIPMENT, UNLESS OTHERWISE NOTED, PROVIDED AND INSTALLED BY FOOD SERVICE CONTRACTOR. PLUMBING CONTRACTOR TO ROUGH-IN AND CONNECT.
8. FOR ADDITIONAL NOTES IN FOOD SERVICE AREA, SEE ARCHITECTURAL DRAWINGS.
9. PROVIDE SOLENOID OPERATED VALVE INTERLOCKED WITH HOOD FIRE EXTINGUISHING SYSTEM. THE OPERATION OF THE HOOD FIRE EXTINGUISHING SYSTEM SHALL AUTOMATICALLY SHUT OFF ALL SOURCES OF FUEL AND HEAT TO ALL EQUIPMENT SERVED BY THE HOOD. ANY GAS APPLIANCE NOT REQUIRING PROTECTION, BUT LOCATED UNDER VENTILATING EQUIPMENT, SHALL ALSO BE SHUT-OFF. ALL SHUT-OFF DEVICES SHALL BE CONSIDERED AN INTEGRAL PART OF THE SYSTEM, AND SHALL FUNCTION WHEN THE SYSTEM IS IN OPERATION. THE AUTOMATIC SHUT-OFF DEVICE MUST BE MANUALLY RESETTABLE PRIOR TO FUEL OR POWER BEING RESTORED.

PUMPS

MARK	GPM	TDH FT	BHP	MOTOR RPM	MOTOR HP	MOTOR V/PH	WT LBS	MAKE & MODEL	REMARKS
CP-1	1	5	-	-	1/25	115/1	7	GRUNDFOS UP-1510B5/TLC	(1) (2)

(1) DOMESTIC HOT WATER RECIRCULATION
(2) FURNISH WITH TIMER AND CORD SET

REGISTERED PROFESSIONAL ENGINEER
WILLIAM M. ESTES
No. M24908
EXP. SEPT 30, 2021
MECHANICAL
STATE OF CALIFORNIA

ph. (831) 649-8000
fx. (831) 649-8038
www.axiomengineers.com
AXIOM ENGINEERS℠
CONSULTING ENGINEERS
AE Project # : 20190241
22 Lower Ragsdale Dr., Suite A
Monterey, California 93940-5788

JHW ARCHITECTS INC.
2400 GARDEN ROAD
SUITE C
MONTEREY, CA 93940
(831) 649-1701
FAX (831) 649-3072
www.jhwarch.com

PROJECT/OWNER

CASA DE NOCHE BUENA

FOR

COMMUNITY HUMAN SERVICES AND GATHERING FOR WOMEN

AT
BROADWAY & NOCHE BUENA
SEASIDE, CA

APN: 012-691-001,2,3

DRAWN BY: --
PRINT DATE:
DRAWING DATE: 01-30-2020
DATE ISSUED FOR CONSTRUCTION:
REVISIONS:
01/31/20 BID SET

SHEET TITLE:

LEGENDS, SCHEDULES AND NOTES - PLUMBING

SHEET NUMBER:

P-0

THE USE OF THESE PLANS AND SPECIFICATIONS IS RESTRICTED TO THE SITE FOR WHICH THEY WERE PREPARED, AND PUBLICATION THEREOF IS EXPRESSLY LIMITED TO SUCH USE. RE-USE, REPRODUCTION OR PUBLICATION BY ANY METHOD IN WHOLE OR IN PART IS PROHIBITED. TITLE TO THE PLANS AND SPECIFICATIONS REMAINS WITH THE ARCHITECT, AND VISUAL CONTACT WITH THEM CONSTITUTES PRIMA FACIE EVIDENCE OF THE ACCEPTANCE OF THESE RESTRICTIONS.

January 29, 2020 4:54:09 p.m.
Drawing: H:\PROJ\2019\19-2205\A1\DWG\19-2205 A1.DWG
Xref: P:\B-SITE.DWG, SITE-BIG.DWG, MAS-BORD.DWG,

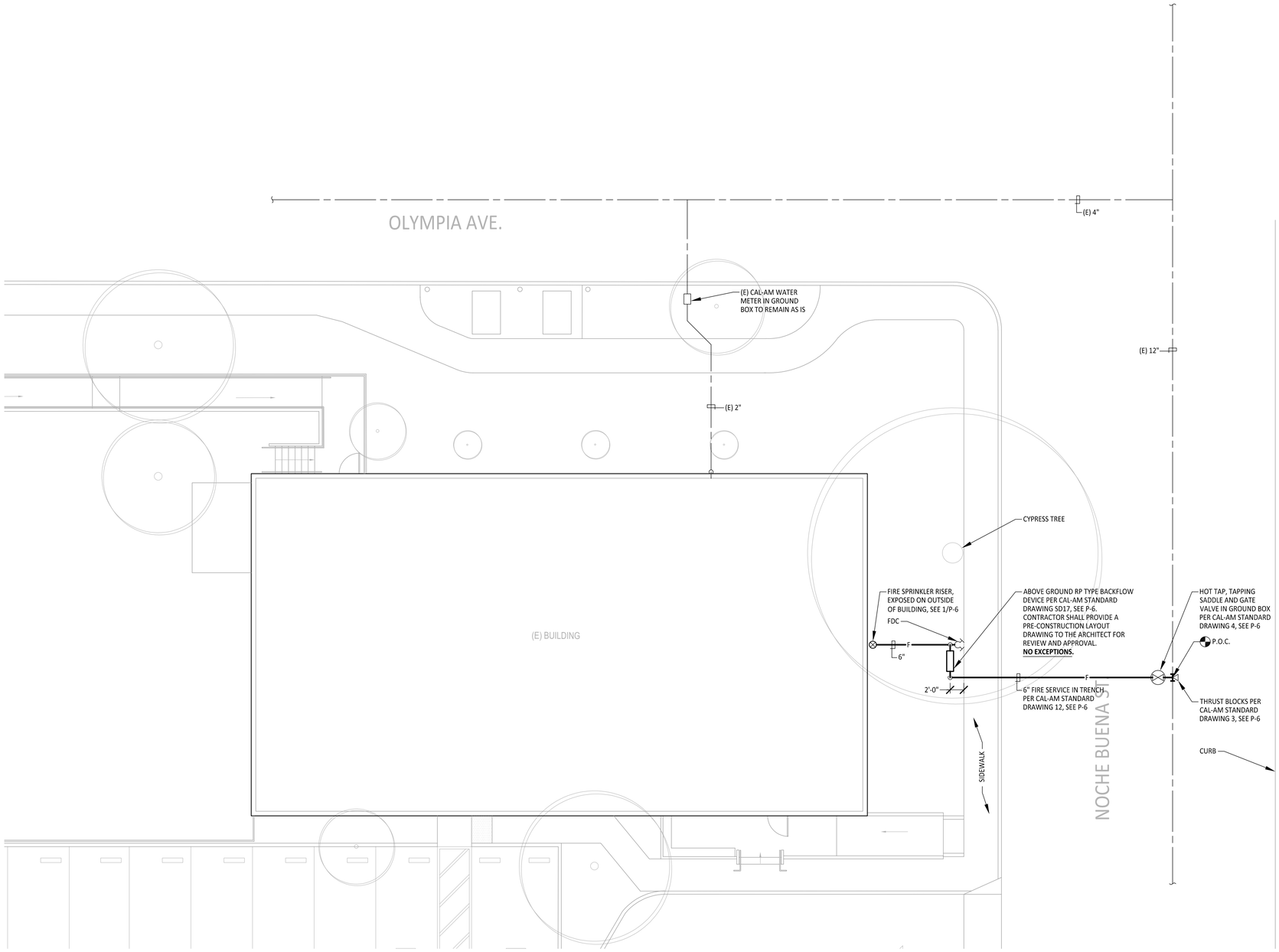

SITE PLAN - PLUMBING

SCALE: 1/8" = 1'-0"

NORTH

THE USE OF THESE PLANS AND SPECIFICATIONS SHALL BE RESTRICTED TO THE ORIGINAL SITE FOR WHICH THEY WERE PREPARED AND PUBLICATION THEREOF IS EXPRESSLY LIMITED TO SUCH USE. RE-USE, REPRODUCTION, OR PUBLICATION BY ANY METHOD, IN WHOLE OR IN PART, IS PROHIBITED. TITLE TO THE PLANS AND SPECIFICATIONS REMAINS WITH THE ENGINEER WITHOUT PREJUDICE. VISUAL CONTACT WITH THESE PLANS AND SPECIFICATIONS SHALL CONSTITUTE PRIMA FACIE EVIDENCE OF THE ACCEPTANCE OF THESE RESTRICTIONS. AXIOM ENGINEERS INC. CONSULTING MECHANICAL ENGINEERS

JHW ARCHITECTS INC.
2400 GARDEN ROAD
SUITE C
MONTEREY, CA 93940
(831) 649-1701
FAX (831) 649-3072
www.jhwarch.com

PROJECT/OWNER

CASA DE NOCHE BUENA

FOR

COMMUNITY HUMAN SERVICES AND GATHERING FOR WOMEN

AT
BROADWAY & NOCHE BUENA
SEASIDE, CA

APN: 012-691-001,2,3

DRAWN BY: --

PRINT DATE:

DRAWING DATE: 01-30-2020

DATE ISSUED FOR CONSTRUCTION:

REVISIONS:
01/31/20 BID SET

SHEET TITLE:

SITE PLAN - PLUMBING

SHEET NUMBER:

P-1

REGISTERED PROFESSIONAL ENGINEER
WILLIAM M. EYTES
No. M24908
EXP. SEPT 30, 2021
MECHANICAL
STATE OF CALIFORNIA

ph. (831) 649-8000
fx. (831) 649-8038
www.axiomengineers.com
AXIOM ENGINEERS SM
CONSULTING ENGINEERS
AE Project #: 20190241
22 Lower Ragsdale Dr., Suite A
Monterey, California 93940-5788

THE USE OF THESE PLANS AND SPECIFICATIONS IS RESTRICTED TO THE SITE FOR WHICH THEY WERE PREPARED, AND PUBLICATION THEREOF IS EXPRESSLY LIMITED TO SUCH USE. RE-USE, REPRODUCTION OR PUBLICATION BY ANY METHOD IN WHOLE OR IN PART IS PROHIBITED. TITLE TO THE PLANS AND SPECIFICATIONS REMAINS WITH THE ARCHITECT, AND VISUAL CONTACT WITH THEM CONSTITUTES PRIMA FACIE EVIDENCE OF THE ACCEPTANCE OF THESE RESTRICTIONS.

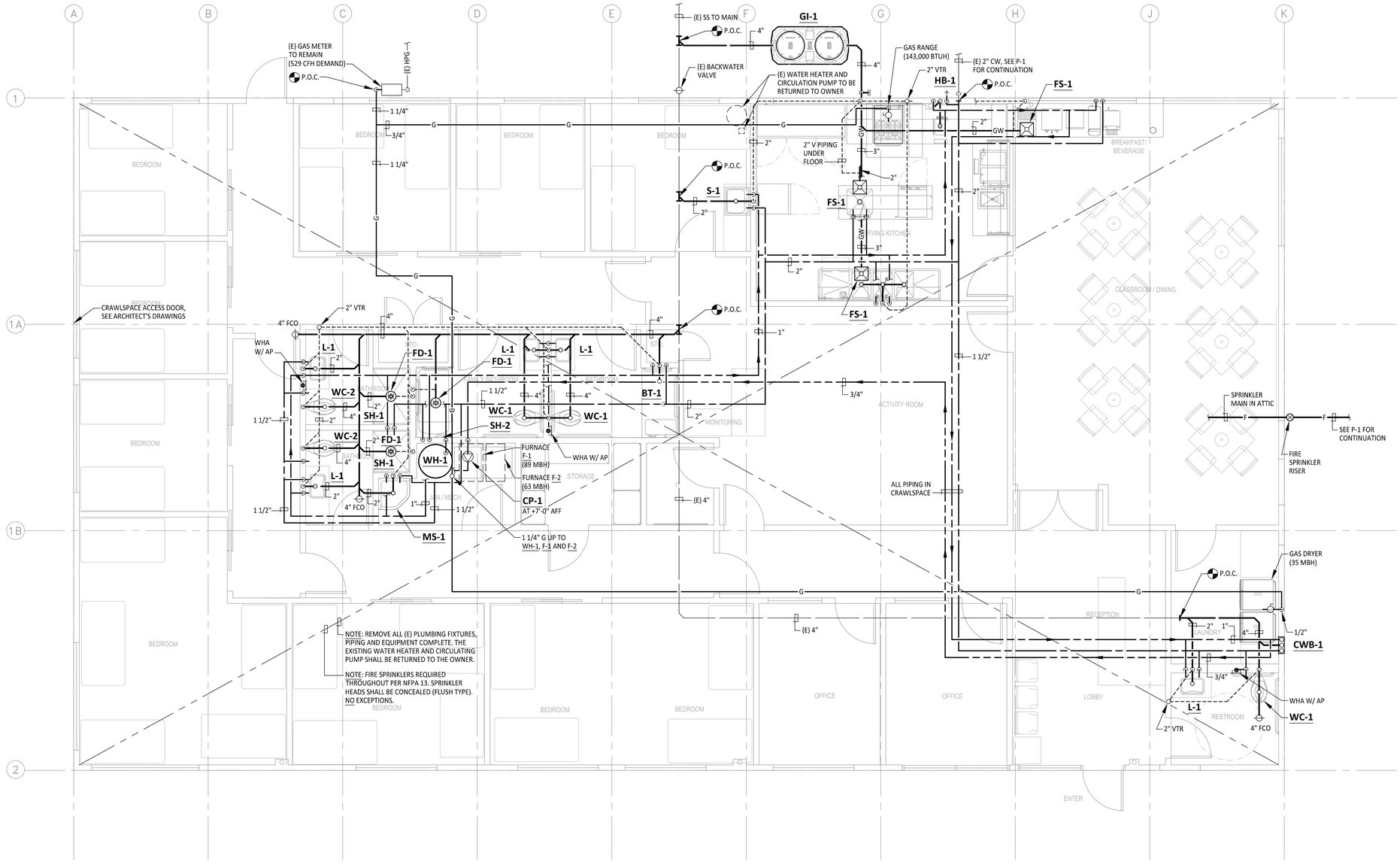

FLOOR PLAN - PLUMBING

SCALE: 1/4" = 1'-0"

NORTH

JHW ARCHITECTS INC.
2400 GARDEN ROAD
SUITE C
MONTEREY, CA 93940
(831) 649-1701
FAX (831) 649-3072
www.jhwarch.com

PROJECT/OWNER

CASA DE NOCHE BUENA

FOR

COMMUNITY HUMAN SERVICES AND GATHERING FOR WOMEN

AT
BROADWAY & NOCHE BUENA
SEASIDE, CA

APN: 012-691-001,2,3

DRAWN BY: --

PRINT DATE:

DRAWING DATE: 01-30-2020

DATE ISSUED FOR CONSTRUCTION:

REVISIONS:
01/31/20 BID SET

SHEET TITLE:

FLOOR PLAN - PLUMBING

SHEET NUMBER:

P-2

REGISTERED PROFESSIONAL ENGINEER
WILLIAM M. ESTES
No. M24908
EXP. SEPT 30, 2021
MECHANICAL
STATE OF CALIFORNIA

ph. (831) 649-8000
fx. (831) 649-8038
www.axiomengineers.com

AXIOM ENGINEERS℠
CONSULTING ENGINEERS
AE Project # : 20190241
22 Lower Ragsdale Dr., Suite A
Monterey, California 93940-5788

THE USE OF THESE PLANS AND SPECIFICATIONS IS RESTRICTED TO THE SITE FOR WHICH THEY WERE PREPARED, AND PUBLICATION THEREOF IS EXPRESSLY LIMITED TO SUCH USE. REUSE, REPRODUCTION OR PUBLICATION BY ANY METHOD IN WHOLE OR IN PART IS PROHIBITED. TITLE TO THE PLANS AND SPECIFICATIONS REMAINS WITH THE ARCHITECT, AND VISUAL CONTACT WITH THEM CONSTITUTES PRIMA FACIE EVIDENCE OF THE ACCEPTANCE OF THESE RESTRICTIONS.

January 29, 2020 4:53:58 p.m.
Drawing: H:\PROJ2019\20190241\DRAWINGS\LNA-FILS\PLB-P3.DWG
Xrefs: DT1-P3.DWG, MAS-BORD.DWG,

THE USE OF THESE PLANS AND SPECIFICATIONS SHALL BE RESTRICTED TO THE ORIGINAL SITE FOR WHICH THEY WERE PREPARED AND PUBLICATION THEREOF IS EXPRESSLY LIMITED TO SUCH USE. RE-USE, REPRODUCTION, OR PUBLICATION BY ANY METHOD, IN WHOLE OR IN PART, IS PROHIBITED . TITLE TO THE PLANS AND SPECIFICATIONS REMAINS WITH THE ENGINEER WITHOUT PREJUDICE. VISUAL CONTACT WITH THESE PLANS AND SPECIFICATIONS SHALL CONSTITUTE PRIMA FACIE EVIDENCE OF THE ACCEPTANCE OF THESE RESTRICTIONS. AXIOM ENGINEERS INC. CONSULTING MECHANICAL ENGINEERS

GB-250

Great Basin™ High Efficiency Grease Interceptor Technical Data

Submittal | Specifications | Installation | Application Specific Details

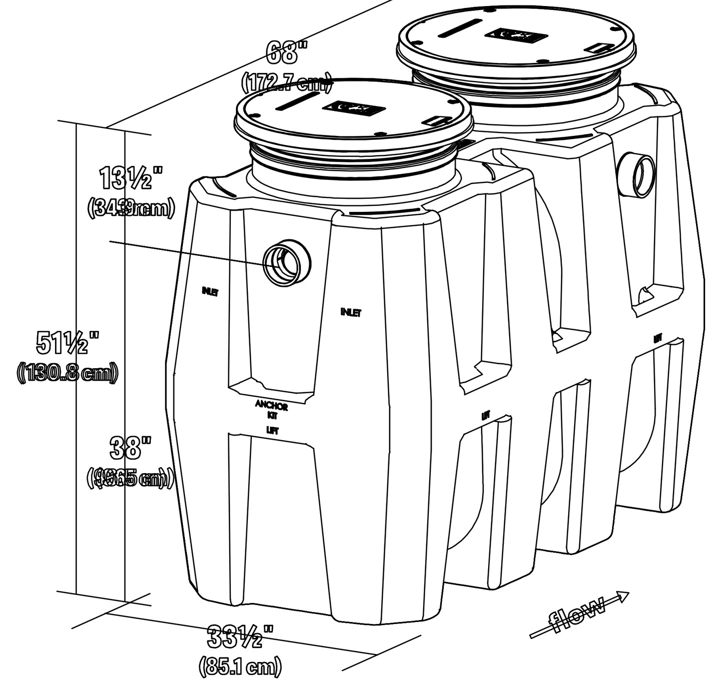

SUBMITTAL

STANDARD: 4" plain end inlet/outlet | Capacities - Liquid: 275 gal. (1,041 L); Grease: 1,076 lbs. (488.1 kg) (147.4 gal./558 L); Solids: 105 gal. (397.5 L); Highway traffic load rated, bolted, gas/water tight composite covers. (16,000 lbs.)

OPTIONS:

- ☐ 4" Male Thread Inlet/Outlet
- ☐ 6" Plain End Inlet/Outlet
- ☐ 6" Male Thread Inlet/Outlet (stainless steel)
- ☐ Pedestrian Rated Covers - 2,000 lbs.
- ☐ H20 Load Rated Pickable Cast Iron Covers
- ☐ Integral Membrane Clamping Collar Kit
- ☐ Pumpout Port (Large)
- ☐ High Water Anchor Kit

TeleGlide Risers

- ☐ SR24 (x2) >6" – 24"
- ☐ LR24 (x2) >24" – 39"
- ☐ SR24 (x4) >39" – 43"
- ☐ SR24 (x2) + LR24 (x2) >43" – 58"
- ☐ LR24 (x4) >58" – 72"

APPROVAL:

Signature:	
Date:	
Company:	
Specifying Engineer:	
Engineering Firm:	

SCHIER LIFETIME GUARANTEED GREASE INTERCEPTORS

MODEL NUMBER: GB-250		DESCRIPTION: Polyethylene Grease Interceptor 100 GPM - 275 gallon capacity		
PART #: 4055-001-XX	DWG BY: C. O'Boyle	DATE: 10/08/2015	REV: 1 4/29/2016	ECO:

9500 Woodend Road | Edwardsville, KS 66111 | Tel: 913-951-3300 | Fax: 913-951-3399 | www.schierproducts.com

© Copyright 2016 Schier, All Rights Reserved

SPECIFICATIONS

NOTES

1. 4" plain end inlet/outlet
2. Unit weight - w/composite covers: 230 lbs.; w/cast iron covers: 340 lbs. (For wet weight add 2290 lbs.)
3. Maximum operating temperature: 190° F continuous
4. Capacities - Liquid: 275 gal.; Grease: 1,076 lbs. (147.4 gal.); Solids: 105 gal.
5. Built-in Flow control.
6. For gravity drainage applications only.
7. Do not use for pressure applications.
8. Cover placement allows full access to tank for proper maintenance.
9. Vent not required unless per local code.
10. Engineered inlet and outlet diffusers are removable to inspect/clean piping.
11. Integral air relief / Anti-siphon / Sampling access.

DIFFUSION FLOW TECHNOLOGY

The inlet diffuser splits influent into three paths, creating laminar flow and utilizing the entire liquid volume of the tank for efficient grease separation. The calibrated openings greatly reduce effluent turbulence. The effluent enters the main chamber without disturbing the existing grease or sediment layers.
The integral air relief / anti-siphon in the top of the outlet diffuser allows pressure stabilization within the unit during operation. The bottom of the outlet diffuser allows only effluent which is free of grease to exit the tank. It can easily be attached to any of the three outlets provided to ease job site piping layouts.

ENGINEER SPECIFICATION GUIDE

Schier Great Basin™ grease interceptor model # GB-250 shall be lifetime guaranteed and made in USA of seamless, rotationally-molded polyethylene. Interceptor shall be furnished for above or below grade installation. Interceptor shall be certified to ASME A112.14.3 (type C) and CSA B481.1, with field adjustable riser system, built-in flow control, built-in test caps and three outlet options. Interceptor flow rate shall be 100 GPM. Interceptor grease capacity shall be 1,076 lbs. Cover shall provide water/gas-tight seal and have minimum 16,000 lbs. load capacity.

CERTIFIED PERFORMANCE

Great Basin hydromechanical grease interceptors are third party performance-tested and listed by IAPMO to ASME #A112.14.3 and CSA B481.1 grease interceptor standards and greatly exceed requirements for grease separation and storage. They are compliant to the Uniform Plumbing Code and the International Plumbing Code.

UPC ® C UPC ®

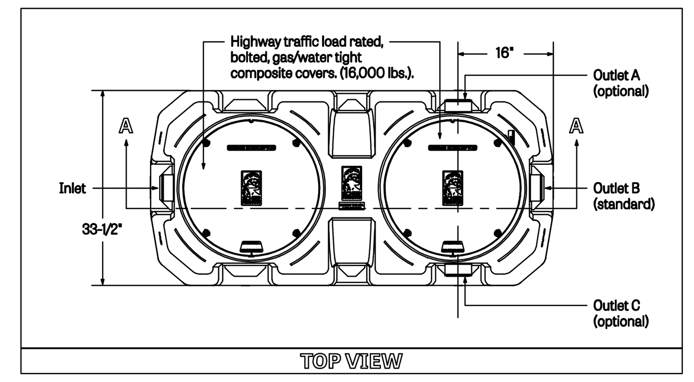

TOP VIEW

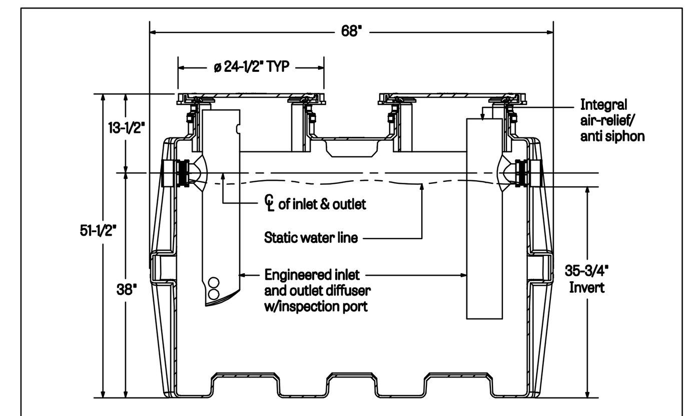

SECTION A-A

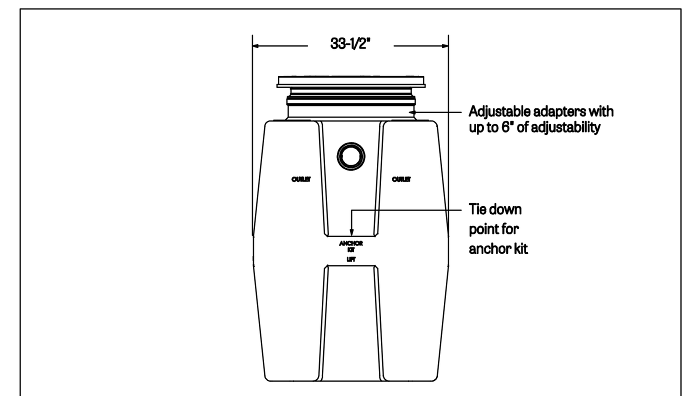

OUTLET END VIEW

SCHIER LIFETIME GUARANTEED GREASE INTERCEPTORS

MODEL NUMBER: GB-250		DESCRIPTION: Polyethylene Grease Interceptor 100 GPM - 275 gallon capacity		
PART #: 4055-001-XX	DWG BY: C. O'Boyle	DATE: 10/08/2015	REV: 1 4/29/2016	ECO:

9500 Woodend Road | Edwardsville, KS 66111 | Tel: 913-951-3300 | Fax: 913-951-3399 | www.schierproducts.com

© Copyright 2016 Schier, All Rights Reserved

INSTALLATION (1 of 3)

WARNING! DO NOT AIR TEST UNIT OR TELEGLIDE RISER SYSTEM! Doing so may result in property damage, personal injury or death.

LEAK/SEAL TESTING

Cap/plug all base unit plumbing connections and remove covers. **For base unit testing**, fill with water to just above the highest connection. **For riser system testing** (if required) fill with water to finished grade level. **CAUTION: Risers must be supported before filling with water to prevent tipping.** Inspect unit, connections and all gaskets and clamps (if applicable) for leaks. Check water level at specific time intervals per local code.

GENERAL INSTALLATION INSTRUCTIONS

Schier grease interceptors are manufactured with an internal flow control system. They do not require an external flow control system or air intake vent. Schier grease interceptors are not to be installed in any other manner except as shown. Consult local codes for separate trapping requirements, cleanout locations and additional installation instructions.

1. The **flow control plate is not installed** on this unit. When the unit is installed 13 feet or more below the fixtures that flow into the unit, or a high flow/increased head pressure condition exists (causing a flow rate above 100 GPM), install the inlet diffuser flow control plate to maintain proper flow rate.
2. Set unit on level solid surface as close as possible to fixtures.
3. Connect outlet diffuser to the desired outlet (A,B,C). Unit is shipped with the outlet diffuser in location B and sealing caps on locations A and C.
4. Connect inlet and outlet drainage lines to unit. Mechanically couple pipes to unit. **Do not solvent weld.**
5. For units with cast iron covers, remove retainer clips prior to burial.

NOTE: Do not install below a hydrostatic slab.

BELOW GRADE INSTALLATION INSTRUCTIONS

EXCAVATION

1. Surrounding soil must be undisturbed soil or well compacted engineering fill.
2. Width and length of excavation shall be a minimum of 12" greater than the tank on all sides and depth shall be 6" deeper than tank bottom.
3. Set the tank level on a 6" deep layer of well-packed crushed aggregate material and connect waste piping per General Installation Instructions.

BACKFILL

1. Preparation of sub grade per geotech recommendations.
2. Stabilize and compact sub grade to 95% proctor.
3. Fill unit with water before backfilling to stabilize unit and prevent float-out during backfilling. Secure covers and risers (if necessary) to the unit.
4. Backfill evenly around tank using crushed aggregate (approximately 3/4" size rock or sand, with no fines), or flowable fill. **Do not compact backfill around unit.**

FINISHED CONCRETE SLAB

Slab must extend 18" minimum outside the unit footprint.

Pedestrian traffic or greenspace areas: 4" Thick reinforced concrete slab required.

Vehicular traffic areas: Minimum 8" Thick concrete slab with rebar required; final thickness of concrete around cover to be determined by specifying engineer. If traffic loading is required the concrete slab dimensions shown are for guideline purposes only. Concrete to be 28 day compressive strength to 4,000 PSI. Use NO. 4 rebar (ø 1/2") grade 60 steel per ASTM A615: connected with tie wire. Rebar to be 2-1/2" from edge of concrete and spaced in a 12" grid with 4" spacing around access openings.

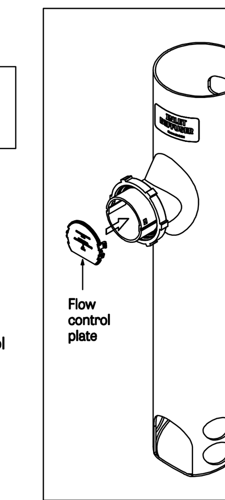

FLOW CONTROL PLATE DETAIL

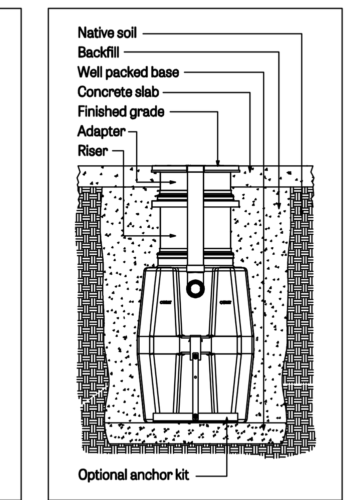

EXCAVATION AND BACKFILL DETAIL

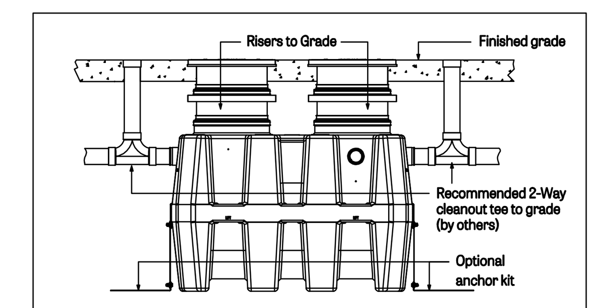

SIDE VIEW DETAIL

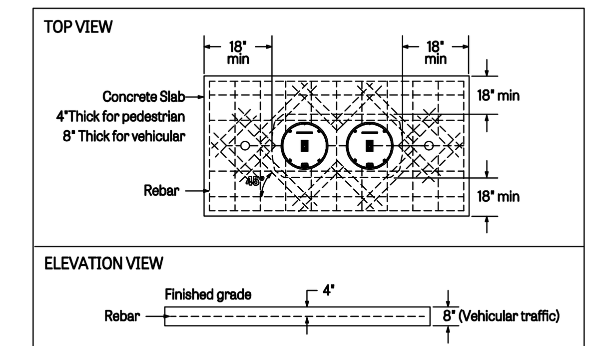

CONCRETE SLAB DETAIL

SCHIER LIFETIME GUARANTEED GREASE INTERCEPTORS

MODEL NUMBER: GB-250		DESCRIPTION: Polyethylene Grease Interceptor 100 GPM - 275 gallon capacity		
PART #: 4055-001-XX	DWG BY: C. O'Boyle	DATE: 10/08/2015	REV: 1 4/29/2016	ECO:

9500 Woodend Road | Edwardsville, KS 66111 | Tel: 913-951-3300 | Fax: 913-951-3399 | www.schierproducts.com

© Copyright 2016 Schier, All Rights Reserved

INSTALLATION (2 of 3)

TELEGLIDE RISER (24 SERIES) INSTALLATION GUIDELINES

Tools needed: 7/16" Nut driver tool/bit (included), marker (included), tape measure and drill with 1/2" chuck. Jigsaw, circular saw or reciprocating saw will be needed if risers need to be cut.

NOTE: To remove a component or adjust its position, the Upper Band Clamp needs to be loosened or removed using nut driver bit. Loosened clamps should be re-tightened to 5 - 8 ft lbs. of torque (same as a rubber no-hub coupling). **The Lower Band Clamp is factory set and should not be adjusted or removed.**

Riser Assembly Instructions/Steps

1. Set unit so the pipe connections line up with job site piping and measure riser height needed from top of cover to finished grade. See Table 1 to select risers needed.
2. Remove covers from adapters. Remove adapters from main unit. On a level surface, per-assemble the risers and adapters, adjusting the components upwards or downwards to achieve the riser height needed. Make sure to maintain minimum and maximum insertion depths as shown in Figure 2. If components are too long, make a circular line around the sidewall with marker and cut with a power saw. The lowest cut line on the riser assembly will be 6" beyond the riser height needed to allow for ideal insertion depth (See Figure 1). An alignment mark should be drawn 2" beyond the riser height needed which will align with the top of the base unit gasket. **DO NOT** cut the alignment mark. The Adapters and risers should sit level with each other. Tighten upper clamps to keep riser/adapter assembly from shifting. Make alignment marks on the sidewalls at the top of all riser gaskets to aid final assembly.
3. **IMPORTANT:** Before the next step, make sure both diffusers are installed inside the main unit at the appropriate locations. Check if there needs to be any flow control adjustment at the inlet diffuser (see general installation instructions).
4. Take apart riser assembly and clean all sidewalls and insides of gaskets to remove dust/debris. Install components into the main unit starting from the lowest riser and work your way up to finished grade. Ensure that riser will not interfere with diffuser, allow min. 1" clearance. Maintain minimum and maximum insertion depths for all components (see Figure 2). Tighten Upper Clamps to specified torque after correctly positioning components. Riser assembly may need to be supported during backfill.
5. If tilting of the adapter is required to be flush with grade, do so AFTER all clamps have been tightened with riser(s)/adapter in a vertical and level position. Tilting is done using gasket flexibility. Tilting before tightening clamps may ruin a perfect gasket seal. Schier recommends tilting only the adapter versus the entire riser assembly to make sure your riser height and proper tank access is maintained.
6. If riser height conditions change after completing above steps, there may be room for adjustment. As long as minimum and maximum insertion depths are maintained (see Figure 2), the adapters/risers can be adjusted/cut as many times as necessary. When riser system installation is complete, see Leak/Seal Testing procedure if required (pg 3 of 6).

ANCHOR KIT INSTALLATION

Stainless steel anchor kit is recommended for installation in high water table conditions to prevent float out. Necessity to be determined by specifying engineer. Hold down force achieved by backfill weight acting on Anchor Plate.

Slide Anchor Hook over tie down point on end wall and bolt to Anchor Strap. Bolt Anchor Strap to Anchor Plate using provided stainless steel hardware. If required, Anchor Plate may be bolted to concrete slab using provided holes.

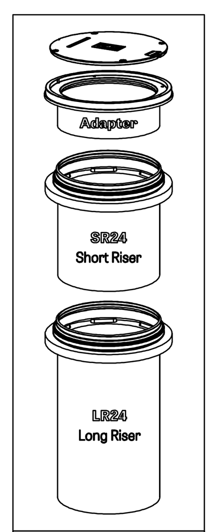

TeleGlide Riser Components

Table 1

Riser Height Needed	Risers Required
0 - 6"	None (use adapter)
>6" - 24"	SR24 (x2)
>24" - 39"	LR24 (x2)
>39" - 43"	SR24 (x4)
>43" - 58"	SR24 (x2) + LR24 (x2)
>58" - 72"	LR24 (x4)

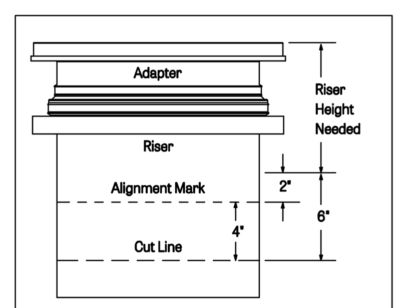

Figure 1 - Riser Measurements

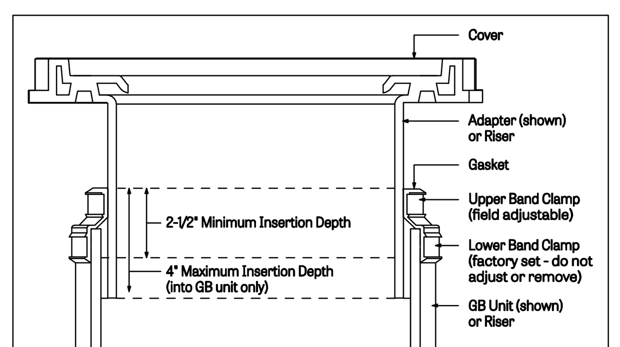

Figure 2 - Insertion Depths

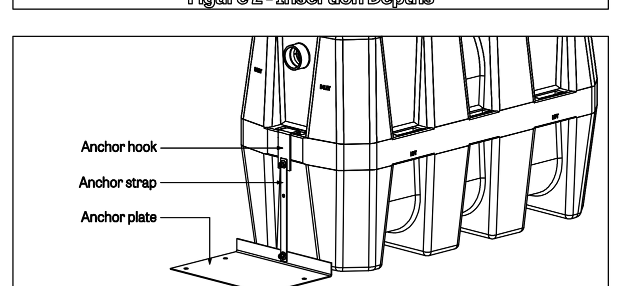

ANCHOR KIT INSTALLATION DETAIL

SCHIER LIFETIME GUARANTEED GREASE INTERCEPTORS

MODEL NUMBER: GB-250		DESCRIPTION: Polyethylene Grease Interceptor 100 GPM - 275 gallon capacity		
PART #: 4055-001-XX	DWG BY: C. O'Boyle	DATE: 10/08/2015	REV: 1 4/29/2016	ECO:

9500 Woodend Road | Edwardsville, KS 66111 | Tel: 913-951-3300 | Fax: 913-951-3399 | www.schierproducts.com

© Copyright 2016 Schier, All Rights Reserved

INSTALLATION (3 of 3)

EXPANDING GREASE CAPACITY

Multiple grease interceptor configurations must be piped as shown to ensure the system works properly as designed. For below grade installations, all units must be level in the excavation pit. Hybrid systems combining parallel and series installations are available per written approval from Schier.

All inlet manifolds, outlet manifolds, piping between units and two-way cleanout tees by others.

Series Installation of Multiple Grease Interceptors

For lower flow rates and higher grease storage requirements.

For below grade installations it is recommended to install a two-way cleanout tee extended to finished grade before the inlet of the first unit, after the outlet of the last unit and in between units (if there is a long run of pipe between units) for line cleaning purposes.

NOTE: When the flow control plate is required, it should only be installed on the first unit in the series.

Parallel Installation of Multiple Grease Interceptors

For flow rates above 100 GPM and higher grease storage requirements.

Units must be equally spaced to ensure equal effluent flow distribution.

For below grade installations it is recommended to install a two-way cleanout tee extended to finished grade before and after each unit for line cleaning purposes.

Flow Splitter™ (FS-DUO, FS-TRIO, FS-QUAD) sold separately.

✱ NOTE:
HIGH WATER TABLE CONDITION NOT PRESENT AT THIS SITE.

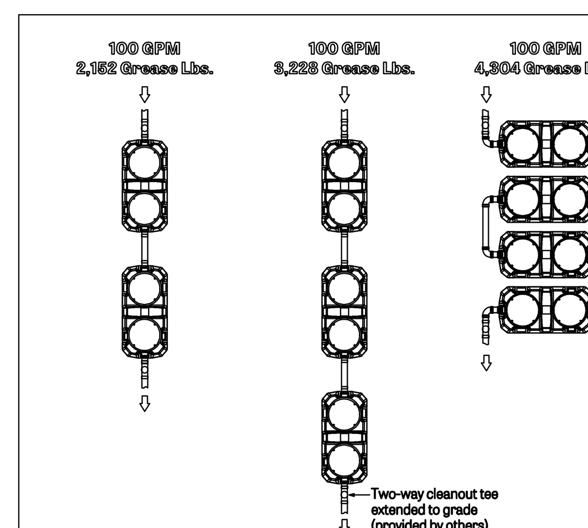

SERIES INSTALLATION CONFIGURATIONS (Preferred)

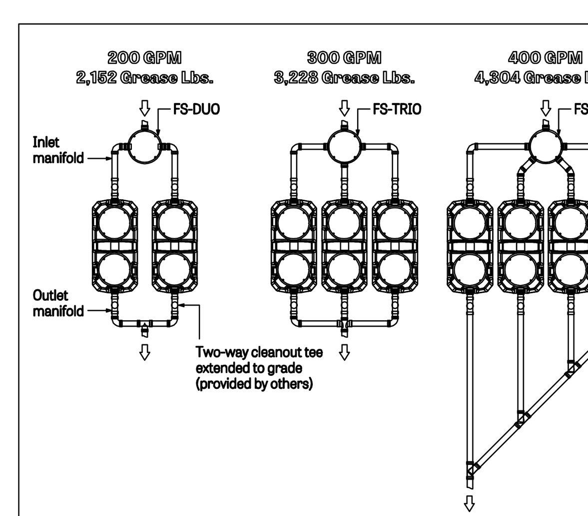

PARALLEL INSTALLATION CONFIGURATIONS

SCHIER LIFETIME GUARANTEED GREASE INTERCEPTORS

MODEL NUMBER: GB-250		DESCRIPTION: Polyethylene Grease Interceptor 100 GPM - 275 gallon capacity		
PART #: 4055-001-XX	DWG BY: C. O'Boyle	DATE: 10/08/2015	REV: 1 4/29/2016	ECO:

9500 Woodend Road | Edwardsville, KS 66111 | Tel: 913-951-3300 | Fax: 913-951-3399 | www.schierproducts.com

© Copyright 2016 Schier, All Rights Reserved

APPLICATION SPECIFIC DETAILS

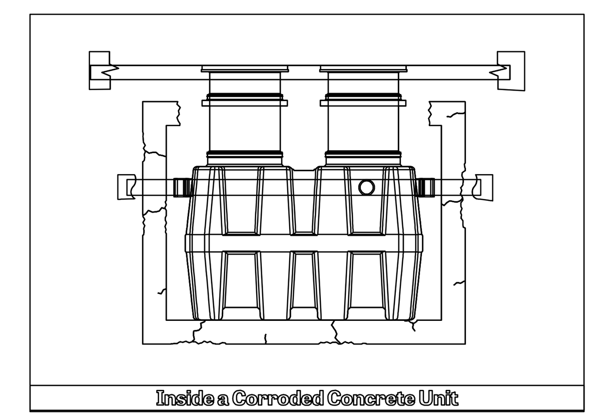

Inside a Corroded Concrete Unit

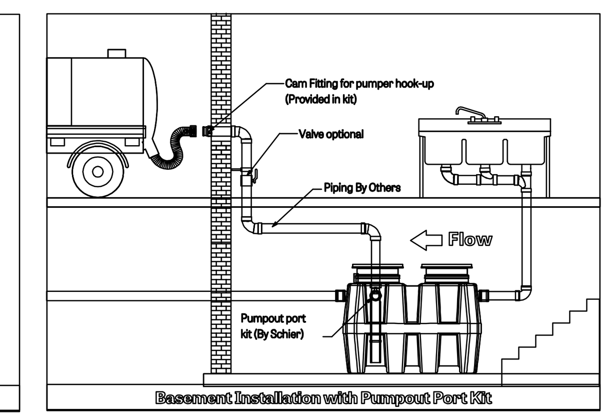

Basement Installation with Pumpout Port Kit

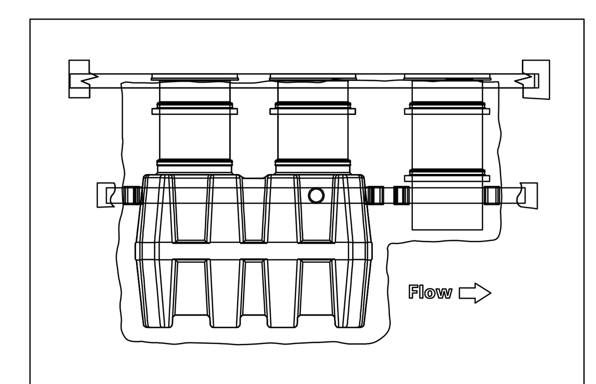

Installation with Sampling Port SV24-L4

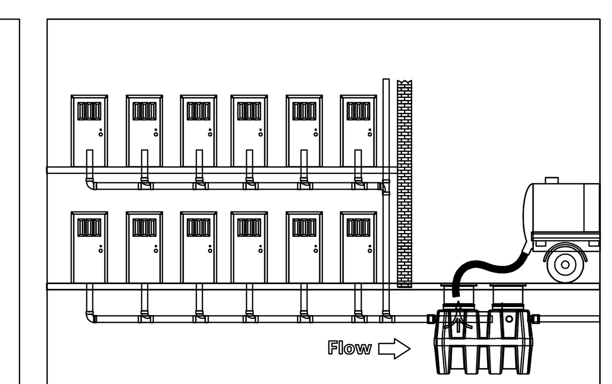

Serving an Apartment Complex

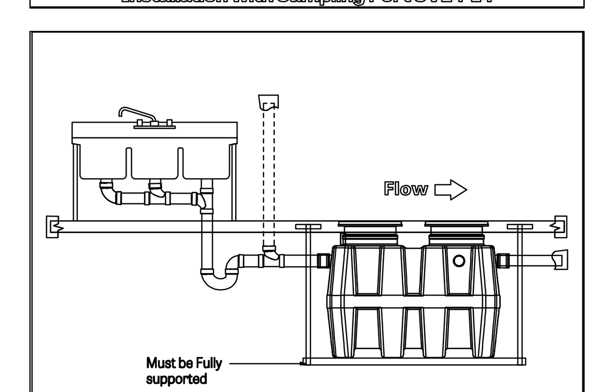

Recessed and Suspended

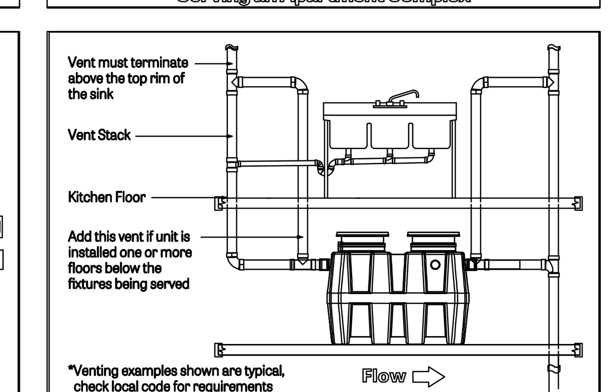

Additional Venting for Floor-Below Installations

SCHIER LIFETIME GUARANTEED GREASE INTERCEPTORS

MODEL NUMBER: GB-250		DESCRIPTION: Polyethylene Grease Interceptor 100 GPM - 275 gallon capacity		
PART #: 4055-001-XX	DWG BY: C. O'Boyle	DATE: 10/08/2015	REV: 1 4/29/2016	ECO:

9500 Woodend Road | Edwardsville, KS 66111 | Tel: 913-951-3300 | Fax: 913-951-3399 | www.schierproducts.com

© Copyright 2016 Schier, All Rights Reserved

1 / P-3 **GI-1 - GREASE INTERCEPTOR**

NO SCALE

REGISTERED PROFESSIONAL ENGINEER
WILLIAM M. ESTES
No. M24908
EXP. SEPT 30, 2021
MECHANICAL
STATE OF CALIFORNIA

ph. (831) 649-8000
fx. (831) 649-8038
www.axiomengineers.com
AXIOM ENGINEERS℠
CONSULTING ENGINEERS
AE Project # : 20190241
22 Lower Ragsdale Dr., Suite A
Monterey, California 93940-5788

JHW ARCHITECTS INC.
2400 GARDEN ROAD
SUITE C
MONTEREY, CA 93940
(831) 649-1701
FAX (831) 649-3072
www.jhwarch.com

PROJECT/OWNER

CASA DE NOCHE BUENA

FOR

COMMUNITY HUMAN SERVICES AND GATHERING FOR WOMEN

AT
BROADWAY & NOCHE BUENA
SEASIDE, CA

APN: 012-691-001,2,3

DRAWN BY: --

PRINT DATE:

DRAWING DATE: 01-30-2020

DATE ISSUED FOR CONSTRUCTION:

REVISIONS:
01/31/20 BID SET

SHEET TITLE:

GREASE INTERCEPTOR - PLUMBING

SHEET NUMBER:

P-3

THE USE OF THESE PLANS AND SPECIFICATIONS IS RESTRICTED TO THE SITE FOR WHICH THEY WERE PREPARED, AND PUBLICATION THEREOF IS EXPRESSLY LIMITED TO SUCH USE. RE-USE, REPRODUCTION OR PUBLICATION BY ANY METHOD IN WHOLE OR IN PART IS PROHIBITED. TITLE TO THE PLANS AND SPECIFICATIONS REMAINS WITH THE ARCHITECT, AND VISUAL CONTACT WITH THEM CONSTITUTES PRIMA FACIE EVIDENCE OF THE ACCEPTANCE OF THESE RESTRICTIONS.

January 29, 2020 4:53:54 p.m.
Drawing: H:\PROJ2019\20190241\DRAWINGS\LNA-FILS\PLB-P6.DWG
Xrefs: DT2-P6.DWG, DT1-P6.DWG, MAS-BORD.DWG,

THE USE OF THESE PLANS AND SPECIFICATIONS SHALL BE RESTRICTED TO THE ORIGINAL SITE FOR WHICH THEY WERE PREPARED AND PUBLICATION THEREOF IS EXPRESSLY LIMITED TO SUCH USE. RE-USE, REPRODUCTION, OR PUBLICATION BY ANY METHOD, IN WHOLE OR IN PART, IS PROHIBITED. TITLE TO THE PLANS AND SPECIFICATIONS REMAINS WITH THE ENGINEER WITHOUT PREJUDICE. VISUAL CONTACT WITH THESE PLANS AND SPECIFICATIONS SHALL CONSTITUTE PRIMA FACIE EVIDENCE OF THE ACCEPTANCE OF THESE RESTRICTIONS. AXIOM ENGINEERS INC. CONSULTING MECHANICAL ENGINEERS

California-American Water Company **General Water Facilities Notes**

Applicable to Construction of Water Main and Appurtenances For Monterey, Montara, Felton and East Palo Alto Service Territories

1. **DEFINITIONS**: In the following notes, UTILITY shall mean California-American Water Company, 50 Ragsdale Drive, Suite 100, Monterey, CA 93942 and INSTALLER shall mean any developer, contractor property owner, firm or person who has been duly authorized by California-American Water Company to perform work on the water systems and facilities owned and/or operated by California-American Water Company.

2. **UTILITY CONTACT PERSON**: For matters related to Work to be performed by INSTALLER, please contact UTILITY'S Engineer: California-American Water Company, 50 Ragsdale Drive, Suite 100, Monterey, CA 93942, email: ffeizoll@calamwater.com

3. **INSTALLER REPRESENTATIVE.** INSTALLER shall assign and provide UTILITY with the name and contact information of a representative (Job Forman) at the job site where the work will be performed on UTILITY facilities. INSTALLER'S Representative is required to attend any pre-construction walk-through meetings. INSTALLER Representative is required to be on the jobsite during all phases of work, including inspections, and INSTALLER shall not replace the Representative without prior approval from UTILITY

4. **STATE AND COUNTY ROAD ENCROACHMENT PERMITS.** Any work within a state highway right-of-way shall comply with the requirements of the State Department of Transportation (CalTrans), including encroachment permits. Work within a County right-of-way shall comply with County requirements, including encroachment permits. It shall be INSTALLER'S responsibility to be thoroughly familiar with the State and/or County Standards of work required and include the full cost of compliance including traffic control, permits, trench fees, etc., in the respective bid items.

5. **OTHER PERMITS.** INSTALLER or his representative shall be required to verify the required permits for the work to be performed and obtain and comply with all necessary permits for construction of the water system, including encroachment permits and any required permits for water service lines from water meters to buildings. INSTALLER is responsible for notification to jurisdictional agencies before commencement of work.

6. **IDENTIFICATION OF BURIED UTILITIES.** Before any Work on underground facilities, INSTALLER shall contact Underground Service Alert (USA) for identifying any buried utilities near the Work area. USA (Phone 1-800-642-2444) must given a 48 hours advance notice. UTILITY is only responsible for marking those water facilities owned by UTILITY and shall not be responsible for marking new facilities until UTILITY accepts ownership. Any calls to the UTILITY regarding such facilities will be forwarded to the INSTALLER. Any damages to water facilities to be owned by UTILITY must be reported to UTILITY immediately and UTILITY must be allowed to inspect and approve repairs or replacements.

7. **WATER SHUTDOWN NOTICES.** INSTALLER shall notify UTILITY or associated companies 48 hours before commencing construction and for notification of water system shut off requests. INSTALLER must ensure that shut down time will not exceed four (4) hours without prior UTILITY approval.

8. **INSPECTION NOTICES.** When applicable, INSTALLER shall give UTILITY and County Inspector 48 hours notice (minimum) before scheduling any meeting or starting construction, and 24 hours notice (minimum) for inspection.

9. **VERIFICATION OF DATA AND INFORMATION PROVIDED BY UTILITY**. Notice is hereby given to the INSTALLER that UTILITY has made all reasonable efforts to identify the types, locations, sizes and depths of existing or planned underground or aboveground utilities, structures, roads, pipelines, hard rock, strata, topography, etc. Such items, when depicted on the plans, have been obtained from sources of varying reliability. Therefore, UTILITY and associated companies cannot assume responsibility for the completeness or accuracy of said information. INSTALLER shall be responsible for verifying the location of all existing facilities by pot-holing all water line connection points to confirm size, depth and material type of existing facilities. In case of conflict/s, INSTALLER shall bring the matter to the attention of UTILITY for resolution before continuing work.

California-American Water Company
Monterey Division
50 Ragsdale Dr., Ste. 100, Monterey, Ca., 93942

REVISIONS:				Drawn:	Approved by:
9.04				RMC	FF

File Name:

Sheet Title: GENERAL WATER FACILITIES NOTES

STANDARD DRAWING No. A

10. **SURVEYING AND LOCATING.** INSTALLER is responsible for all required surveying and staking, showing the location and grades for installing the water system. INSTALLER is responsible for protecting and maintaining all survey monuments and staking whether existing or discovered during construction.

11. **JOBSITE SAFETY.** INSTALLER is solely responsible for any currently applicable safety law of any jurisdictional agency. INSTALLER is also responsible for project site safety and for public safety including traffic control, 24-hours per day for all days from the notice to proceed through the notice of completion.

12. **MATERIAL OF CONSTRUCTION.** INSTALLER shall provide and install all materials and insulation of the water distribution system in accordance with the standards and specifications of UTILITY and associated companies, which are incorporated herein by reference, unless otherwise noted on these plans. UTILITY has the final decision on all materials, including backfill, pipe, fittings, and valves, that will be used for placement of all water facilities including any new water main.

13. **WORK COORDINATION.** INSTALLER is responsible for coordinating their work with all other contractors to avoid any conflicts.

14. **PIPE AND FITTINGS.** Minimum water main size shall be 8" diameter. Unless surrounding ground conditions dictate otherwise, all header pipes from main to service meter shall be 2" PVC, Schedule 80, and from meter to service shall be 1" or 2" Type K copper. Unless otherwise approved by UTILITY, all standard water mains larger than 12-inches shall be Class 250, Mortar Lined, Bit Coated and Polywrapped Ductile Iron. Piping 12-inch diameter and smaller shall be AWWA C-900 Class 150 or 200 PVC, unless otherwise noted (Class 200 pipe is required when water main is near sewers). All fittings shall be ductile iron with cement lined inside and bituminous coated outside, which shall be painted with polyguard #14 mastic. INSTALLER shall provide pipe and fitting materials submittal to UTILITY for approval before beginning work.

15. **FLANGED FITTINGS.** All flanged fittings shall be bolted together with zinc coated steel nuts and bolts, grade 5 or better.

16. **MECHANICAL JOINTS.** Use EBAA Mechanical Joint Mega-Lugs on all mechanical joint fittings.

17. **SEPARATION DISTANCE FORM SEWER LINES AND SOURCES OF CONTAMINATION.** Water mains shall be laid in separate trenches as far as possible from nearby sewer and storm drain lines. If less than ten-feet horizontal separation between the water lines and sewer or storm drain lines, C-900 Class 200 PVC pipe or Class 50 Ductile Iron Pipe shall be used (Class or pressure rating to be determined or approved by UTILITY). Placement of water lines near other sources of contamination or hydrocarbon related facilities should require special approval from UTILITY. INSTALLER to immediately inform the UTILITY Engineer when insufficient separation conditions occur (less than 10-feet horizontal or 1-foot vertical).

18. **UNDERGROUND PIPE IDENTIFIER**. All installation of mains and services shall have green-coated #10 GA. standard copper wire for locating.

19. **HOT TAPS.** All tapping sleeves to be mechanical joint type or all stainless steel circumference seal type with stainless steel flange, bolts and nuts.

20. **EXPIRATION OF UTILITY APPROVALS.** UTILITY'S approval signatures on the construction plans are good for one year from date of signature. Plans will be subject to review thereafter.

21. **VALVES.** Unless otherwise noted or directed by UTILITY, INSTALLER shall install gate valves (AWWA C-509) for water mains 12-inches or smaller, and install butterfly valves (AWWA C-504) for mains larger than 12-inches. All valves shall be flanged to fittings (Cross, tee, etc) except where mains are 4-feet behind sidewalk with tees under corner radius in which case the valve shall be placed in line beyond the radius and restrained. Gate valves shall be resilient wedge, epoxy coated with SS bolts. Valves stem shall be provided for valves with a cover of 4-ft or greater. Underground valves shall have 8" diameter (minimum) valve box riser, grade valve box and metal lid marked "water", as shown on UTILITY standard drawings.

California-American Water Company
Monterey Division
50 Ragsdale Dr., Ste. 100, Monterey, Ca., 93942

REVISIONS:				Drawn:	Approved by:
				RMC	FF

File Name:

Sheet Title: GENERAL WATER FACILITIES NOTES

STANDARD DRAWING No. B

22. **FIRE HYDRANTS.** All public fire hydrants shall be 6" wet barrel, AWWA approved C503, and as specified on drawings or approved equal. Make and model standard for the Monterey service territory is James Jones, Montara and Felton Districts is Clow 960 and East Palo Alto is James Jones. All public fire hydrants shall be painted according to the jurisdiction fire department (UTILITY'S standard color is white). Fire hydrant make and model for private properties shall be as specified by the Local Fire Department and shall painted red. All fire hydrants shall be coated with approved epoxy paint. Fire Hydrant Base Flange to be a minimum of 4-inches above finish grade. Check valves may be required on hydrant risers in critical locations as determined by UTILITY.

23. **BACKFLOW PREVENTION DEVICE.** Backflow Prevention Devices if required, shall be installed and tested by a UTILITY approved contractor and certified backflow tester before water service activation. The type of backflow prevention device shall be specified by UTILITY and installed above ground by INSTALLER per UTILITY standards and specifications. No single check detector checks valves will be allowed. No tees or cross connections will be allowed between any water meter and any backflow prevention device. The backflow prevention device shall be installed as close as possible to the water meter or point of serviced connection (typically within 18 inches).

24. **CONCRETE THRUST BLOCKS.** Thrust block shall be installed where pipe deflections exceed 4 degrees per coupling/fittings, as specified by pipe manufacturer. Use EBAA mechanical joint mega-lugs on all mechanical joint fittings. Use EBAA series 1600 pipe restraints in lieu of concrete thrust blocks. UTILITY Engineer to advise INSTALLER of required length of pipe to be restrained. Concrete thrust blocks to be used if restraints cannot be utilized.

25. **TRENCH DEPTH AND COVER.** Trench depth shall be sufficient to allow top of water main to have a minimum of 36-inches of cover, unless otherwise directed by UTILITY Engineer.

26. **INSPECTION BEFORE BACKFILLING**. All water facilities to be owned and maintained by UTILITY, including mains; fittings, valves and services shall be inspected and approved by UTILITY before backfilling.

27. **BACKFILL AND COMPACTION.** All trenches in existing or proposed streets and paved areas such as parking lots, driveways, etc., shall be backfilled and compacted in accordance with the standards and specifications by UTILITY, unless otherwise noted, and shall also comply with minimum requirements of the County for which the work is being done, including any encroachment permit conditions. Trench compaction shall be by mechanical compaction to a minimum of 95 percent, unless noted otherwise on the plans.

28. **BACKFILL SOIL COMPACTION TESTING**. INSTALLER is responsible for securing, compensating and monitoring of; a State certified independent soils testing serviced to provide compaction testing of all backfill work. Compaction tests documenting compliance with minimum compaction requirements will be taken at 50 foot intervals or per the minimum County requirements, whichever is greater. All testing reports shall be submitted to UTILITY for review and approval as soon as available. Testing results from a certified County or City representative is permitted where jurisdictional requirements provide such compaction testing.

29. **LANDSCAPING RESTRICTIONS.** Planting of tress and shrubs in the affected areas and/or easements where a water main and/or services are proposed or existing should be avoided. Under no circumstances should a tree or shrub be planted in the water trench line. All shrubs and/or trees that are allowed to be planted within the planned unit development should be center tapping root ornamental style.

30. **DISINFECTIONS AND FLUSHING.** INSTALLER shall perform disinfections and flushing of new water system/s in accordance with UTILITY standards. With regards to the disposal of the flush water, INSTALLER shall be required to comply with UTILITY, County and State NPDES discharge permit requirements and shall provide necessary documentation ensuring compliance where applicable.

31. **INSPECTION BEFORE ACTIVATION.** All water facilities to be owned and maintained by UTILITY, including mains; fittings, valves and services shall be inspected and approved by UTILITY before activation. INSTALLER shall provide hydrostatic test to be witnessed by UTILITY representative per UTILITY Standards. UTILITY shall collect samples for bacteriological testing. New saddles and services shall be installed prior to bacteriological and pressure testing of main.

California-American Water Company
Monterey Division
50 Ragsdale Dr., Ste. 100, Monterey, Ca., 93942

REVISIONS:				Drawn:	Approved by:
				RMC	FF

File Name:

Sheet Title: GENERAL WATER FACILITIES NOTES

STANDARD DRAWING No. C

32. **AS-BUILT DRAWINGS.** INSTALLER shall submit As-Built (Record) drawings of the water system, or modification installed by the INSTALLER. The As-Built drawings must be submitted to, and approved by, UTILITY within 30 days of completion of construction, retentions shall be held until as-built approval by UTILITY.

33. **WARRANTY.** Warranty of new facilities to be conveyed to UTILITY shall be for a minimum period of one year from date of commencement (or final acceptance).

34. **RETURNING PROPERTY TO ORIGINAL CONDITION.** INSTALLER is advised to photograph or videotape job site area to document existing conditions before beginning work to minimize undue claims. INSTALLER is responsible to return all property to original or better condition, including traffic markings. All claims shall be borne and resolved by INSTALLER or UTILITY shall address said claim and may deduct any costs from final payment/retention. A copy of the claim documents shall be submitted to UTILITY Engineer within 48 hours after receiving such any claims.

California-American Water Company
Monterey Division
50 Ragsdale Dr., Ste. 100, Monterey, Ca., 93942

REVISIONS:				Drawn:	Approved by:
				RMC	FF

File Name:

Sheet Title: GENERAL WATER FACILITIES NOTES

STANDARD DRAWING No. D

REQUIRED SEPARATION BETWEEN WATER MAINS AND SANITARY SEWERS

BASIC SEPARATION REQUIREMENTS:

WATER MAINS AND SEWERS SHOULD BE SEPARATED AS FAR AS IS REASONABLE IN BOTH THE HORIZONTAL AND VERTICAL DIRECTIONS WITH SEWERS ALWAYS LOWER THEN WATER MAINS.

PARALLEL CONSTRUCTION: THE HORIZONTAL DISTANCE BETWEEN PRESSURE WATER MAINS AND SEWERS SHALL BE AT LEAST 10 FEET

PERPENDICULAR CONSTRUCTION (CROSSING): PRESSURE WATER MAINS SHALL BE AT LEAST 1 FOOT ABOVE SANITARY SEWERS WHERE THESE LINES MUST CROSS.

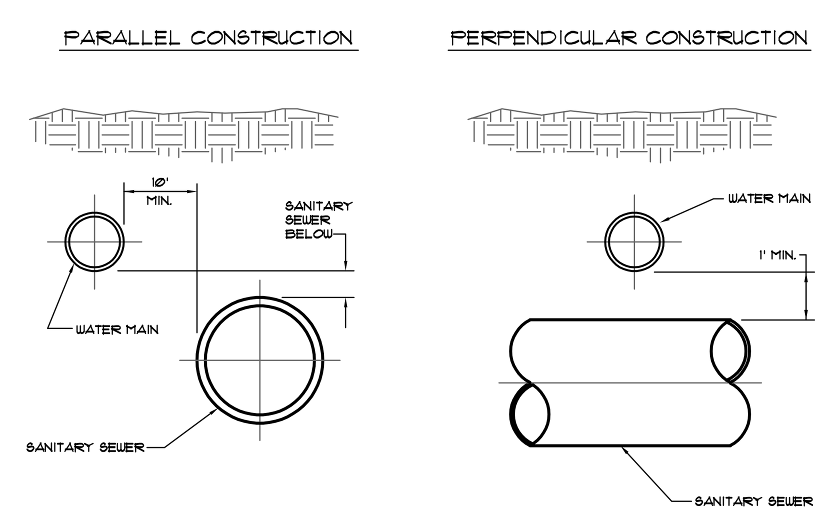

FILENAME: CADDISK1\SD1

California-American Water Company
Monterey Division
50 Ragsdale Dr., Ste. 100, Monterey, Ca., 93942

REVISIONS: | Drawn: | Approved by:

Sheet Title: REQUIRED SEPARATION BETWEEN WATER MAINS AND SANITARY SEWERS

STANDARD DRAWING No. 1

SPECIAL CONSTRUCTION REQUIREMENTS

WHERE REQUIRED WATER MAIN SEPARATION FROM SANITARY SEWER CANNOT BE MAINTAINED

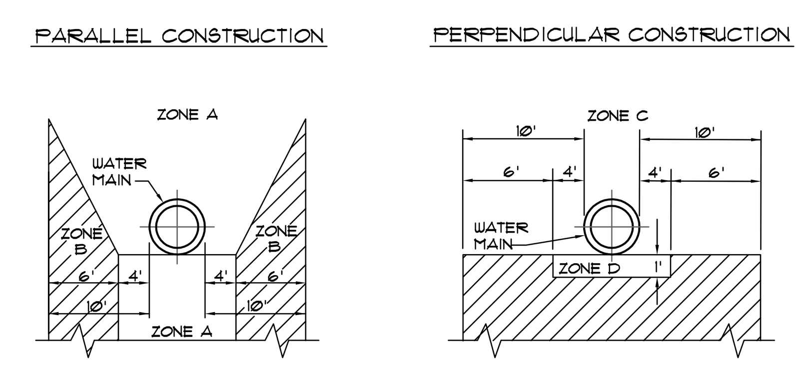

IF AN EXISTING SEWER IS LOCATED WITHIN ZONES A, B, C, OR D OF A PROPOSED WATER MAIN, THE FOLLOWING SPECIAL REQUIREMENTS APPLY:

ZONE

A NO WATER MAINS SHALL BE CONSTRUCTED WITHOUT SPECIAL PERMISSION FROM THE HEALTH DEPARTMENT.

B IF THE SEWER DOES NOT MEET ZONE B REQUIREMENTS, THE WATER MAIN SHALL BE OF CLASS 200 PIPE OR EQUIVALENT.

C NO WATER MAINS SHALL BE CONSTRUCTED WITHOUT SPECIAL PERMISSION FROM THE HEALTH DEPARTMENT. IF PERMISSION IS GRANTED, THE SEWER PIPE SHALL BE ENCASED WITH REINFORCED CONCRETE AND THE WATER MAIN SHALL BE OF CLASS 200 PIPE OR EQUIVALENT.

D THE SEWER SHALL BE ENCASED WITH REINFORCED CONCRETE.

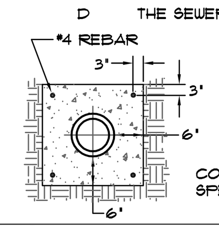

CONCRETE SHALL BE CLASS B (CALIF. DEPT. OF TRANSPORTATION STD. SPECIFICATIONS, SECTION 90, CURRENT ISSUE) OR EQUIVALENT.

FILENAME: CADDISK1\SD2

California-American Water Company
Monterey Division
50 Ragsdale Dr., Ste. 100, Monterey, Ca., 93942

REVISIONS: | Drawn: | Approved by:

Sheet Title: SPECIAL CONSTRUCTION REQUIREMENTS FOR WATER MAINS

STANDARD DRAWING No. 2

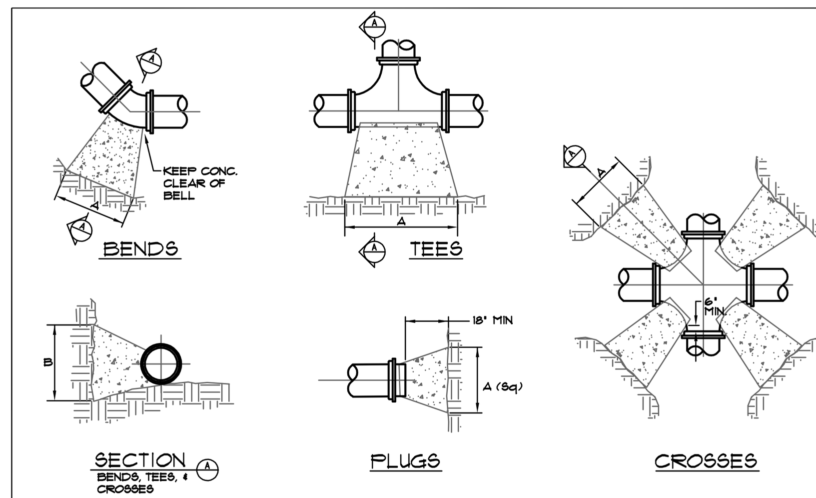

(SEE NOTE No. 24)

REQUIRED BEARING AREA ON UNDISTURBED SOIL AND TYPICAL DIMENSIONS

SIZE	CROSSES/90° BENDS			45° BENDS			22-1/2° BENDS			TEES & PLUGS		
	AREA SQ. FT.	'A'	'B'	AREA SQ. FT.	'A'	'B'	AREA SQ. FT.	'A'	'B'	AREA SQ. FT.	'A'	'B'
4"	1.8	22"	12"	1.0	12"	12"	0.5	10"	7"	1.3	16"	12"
6"	4.0	36"	16"	2.2	20"	16"	1.1	16"	10"	2.8	29"	14"
8"	7.1	42"	24"	3.8	23"	24"	2.0	21"	14"	5.0	45"	16"
10"	11.1	53"	30"	6.1	30"	30"	3.1	22"	20"	7.9	48"	24"
12"	16.0	58"	40"	8.7	36"	36"	4.4	32"	20"	11.3	54"	30"
14"	21.6	74"	42"	11.9	43"	40"	6.0	36"	24"	15.4	62"	36"
16"	28.4	85"	48"	15.5	53"	42"	7.8	37"	30"	20.1	69"	42"

NOTES

1. BASED ON 150 PSI STATIC PRESSURE PLUS 100 PSI WATER HAMMER AND 2500 PSF SOIL BEARING
2. FOR UNSTABLE SOIL CONDITIONS, CHECK WITH ENGINEER FOR THRUST BLOCK DIMENSIONS
3. FOR MAIN SIZES GREATER THAN 16" SEE ENGINEER FOR THRUST BLOCK DIMENSIONS

FILENAME: CADDISK2\SD3

California-American Water Company
Monterey Division
50 Ragsdale Dr., Ste. 100, Monterey, Ca., 93942

REVISIONS: | Drawn: | Approved by:

Sheet Title: THRUST BLOCK DETAILS

STANDARD DRAWING No. 3

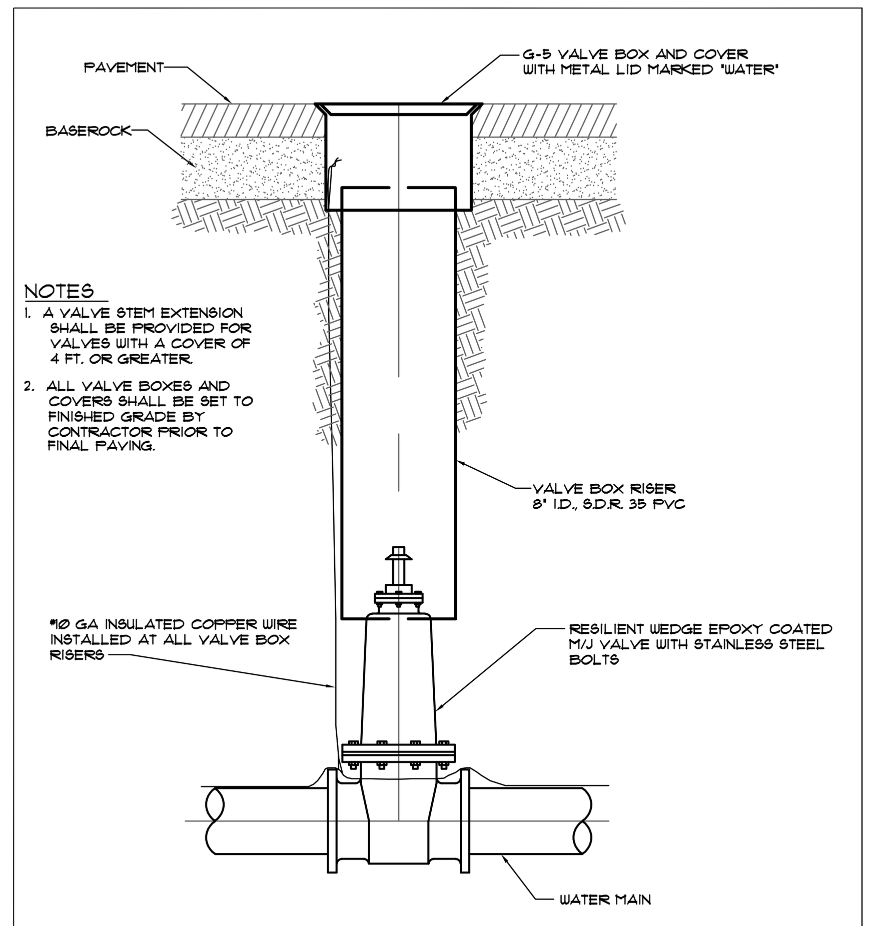

FILENAME: CADDISK2\SD4

California-American Water Company
Monterey Division
50 Ragsdale Dr., Ste. 100, Monterey, Ca., 93942

REVISIONS: | Drawn: | Approved by:

Sheet Title: GATE VALVE AND BOX DETAIL

STANDARD DRAWING No. 4

REQUIRED TRENCH WIDTH FOR WATER MAINS

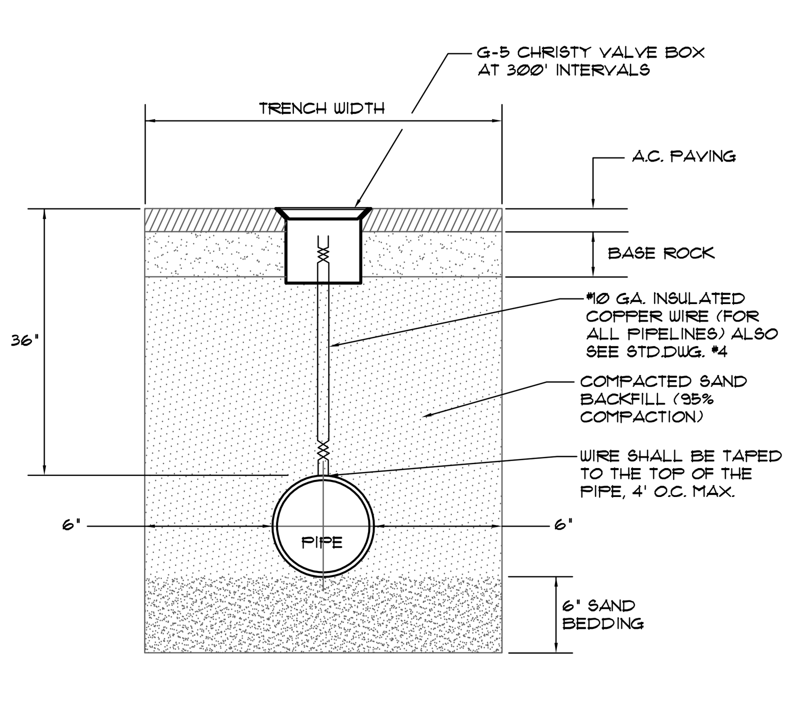

NOTE:

MINIMUM TRENCH WIDTH TO BE 12" LARGER THAN O.D. OF PIPE UP TO 16" O.D. PIPE. ALL OTHER SIZES ABOVE 16" O.D. SHALL BE 18" LARGER THAN THE O.D. OF PIPE.

FILENAME: CADDISK2\SD12

California-American Water Company
Monterey Division
50 Ragsdale Dr., Ste. 100, Monterey, Ca., 93942

REVISIONS: | Drawn: | Approved by:

Sheet Title: REQUIRED TRENCH WIDTH FOR WATER MAINS

STANDARD DRAWING No. 12

THE "CONTRACTOR/OWNER" SHALL INSTALL THE TAPPING SLEEVE, VALVE, MAKE THE HOT TAP AND PVC C-900 PLASTIC PIPE OR DUCTILE IRON PIPE FROM THE END OF THE TAPPING GATE VALVE TO THE PROPERTY LINE. THE "CONTRACTOR/OWNER" SHALL INSTALL AN APPROVED R.P.D.A. BACKFLOW ASSEMBLY AT THE PROPERTY LINE OR AT EDGE OF ROADWAY, HAVE THE R.P.D.A. TESTED BY A CERTIFIED TESTER, AND REPAVE THE STREET IN THE AREA OF WORK COMPLETED. THE "CONTRACTOR/OWNER" SHALL FOLLOW CAL-AM STANDARD PROCEDURES FOR THE CHLORINATION, PRESSURE TESTING, AND SAMPLING OF THE FIRE SERVICE LINE.

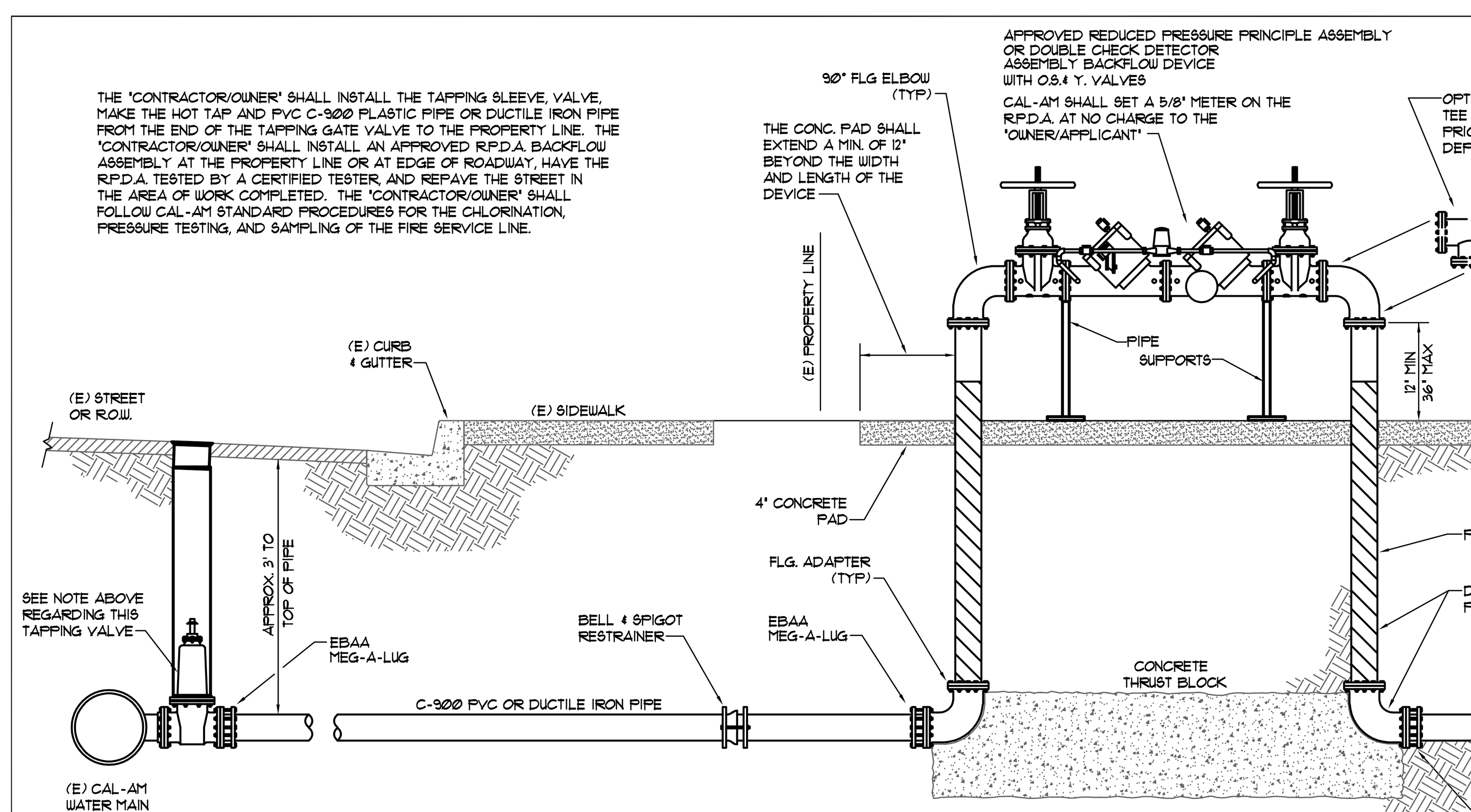

NOTE: THE TAPPING SLEEVE, VALVE AND PIPING TO EDGE OF PAVEMENT SHALL BE OWNED AND MAINTAINED BY CAL-AM. THE LINE FROM THE TAPPING SLEEVE TO THE EDGE OF PAVEMENT WILL BE INSTALLED BY THE CONTRACTOR BUT OWNED AND MAINTAINED BY CAL-AM. THE REMAINING FIRE SERVICE SYSTEM SHALL BE INSTALLED, OWNED AND MAINTAINED BY THE "OWNER/APPLICANT."

NOTES:

1) MINIMUM FIRE SERVICE SIZE IS 4"
2) CONTRACTOR IS RESPONSIBLE FOR STREET EXCAVATION AND PAVING FROM PROPERTY LINE TO CAL-AM MAIN
3) CONTRACTOR TO PROVIDE AND INSTALL ALL SPECIFIED MATERIAL AND TAP EXIST. MAIN USING A TAPPING SLEEVE AND TAPPING VALVE, CAL-AM TO APPROVE TAPPING CONTRACTOR
4) CONTRACTOR WILL INCLUDE PROPER RESTRAINTS
5) SAWCUTTING, BACKFILLING AND COMPACTION TESTS WILL BE DONE IN ACCORDANCE WITH APPLICABLE CITY STANDARDS
6) EBAA MEG-A-LUGS TO BE INSTALLED PER MANUFACTURERS RECOMMENDATIONS

FILENAME:

California-American Water Company
Monterey Division
50 Ragsdale Dr., Ste. 100, Monterey, Ca., 93942

Sheet Title: STANDARD DRAWING No. 17

Job Name: PRIVATE FIRE SERVICE PROTECTION SERVICE D.C.D.A. AND R.P.D.A. INSTALLATION

Date: JAN '01 | Job No: | Sketch No: SD17 | Design: | Drawn: STP | Sheet of

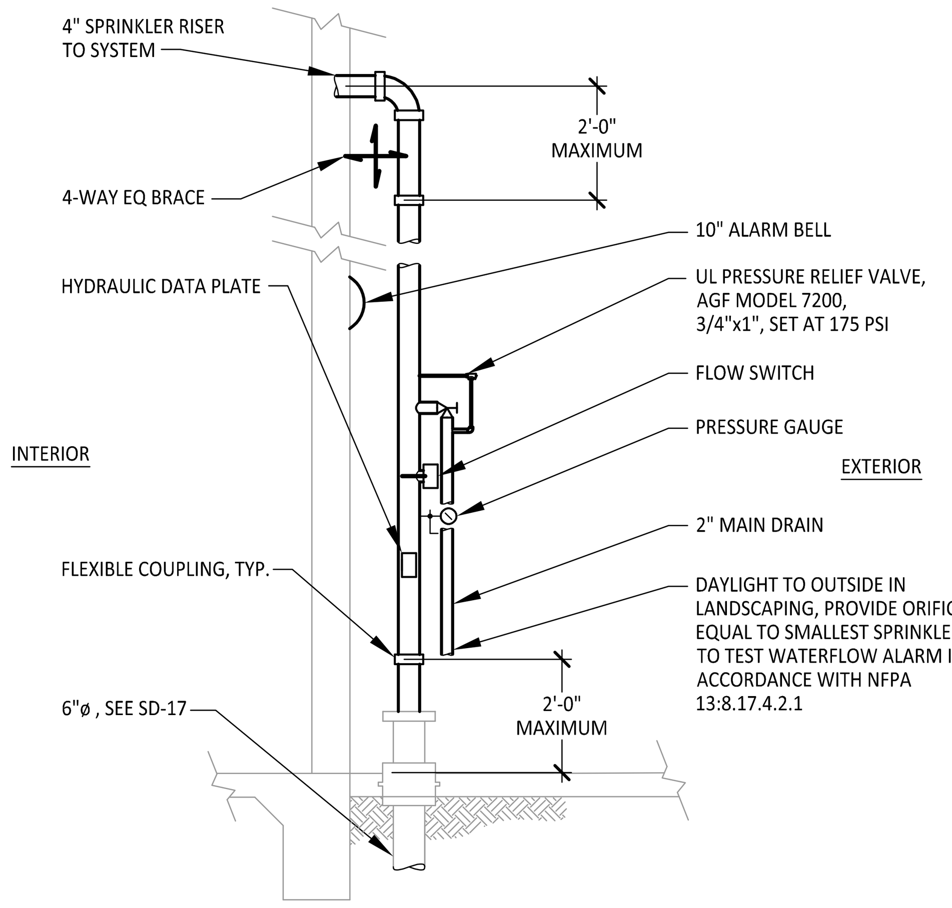

1 / P-6 FIRE SPRINKLER RISER

NO SCALE

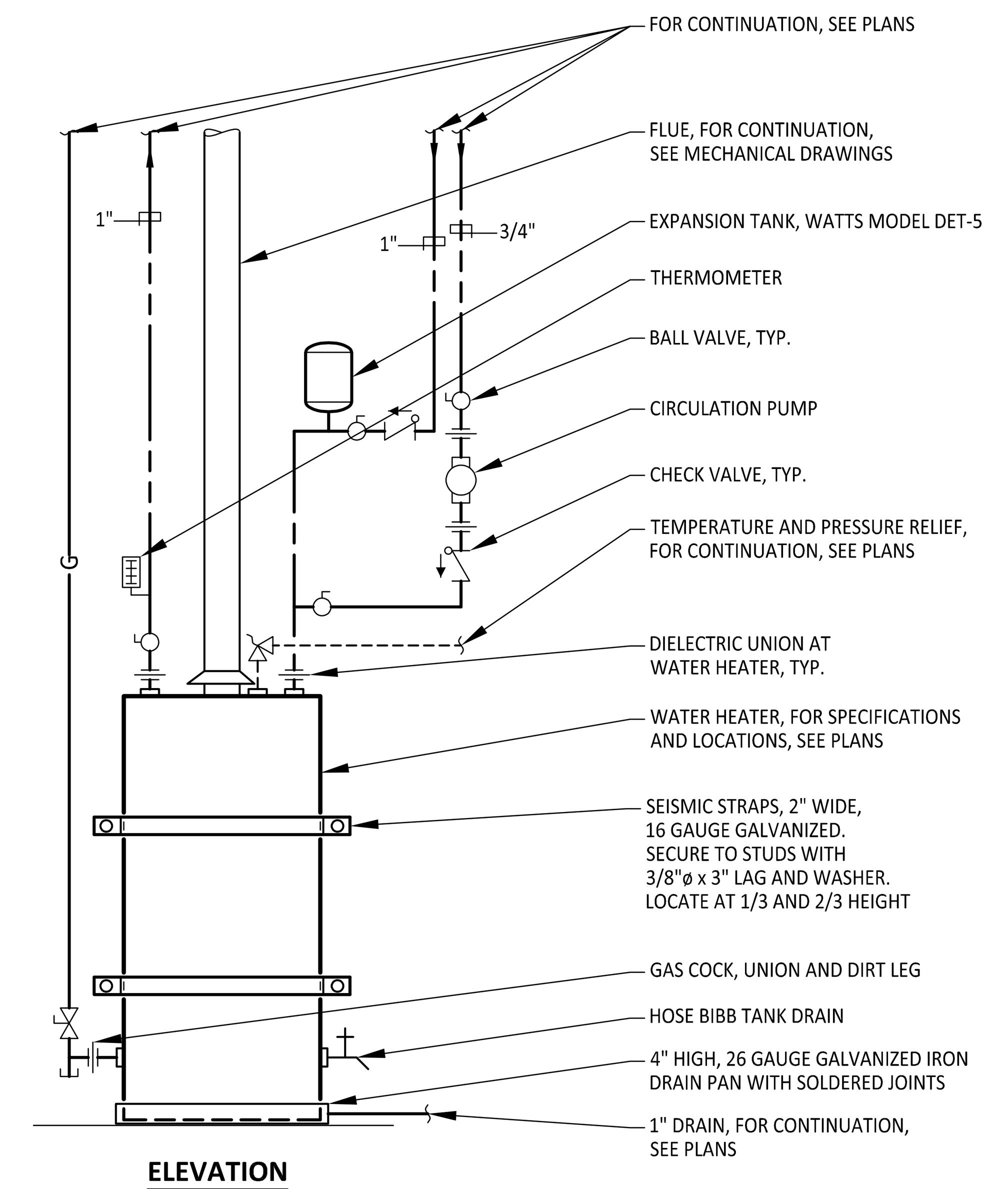

2 / P-6 GAS WATER HEATER

NO SCALE

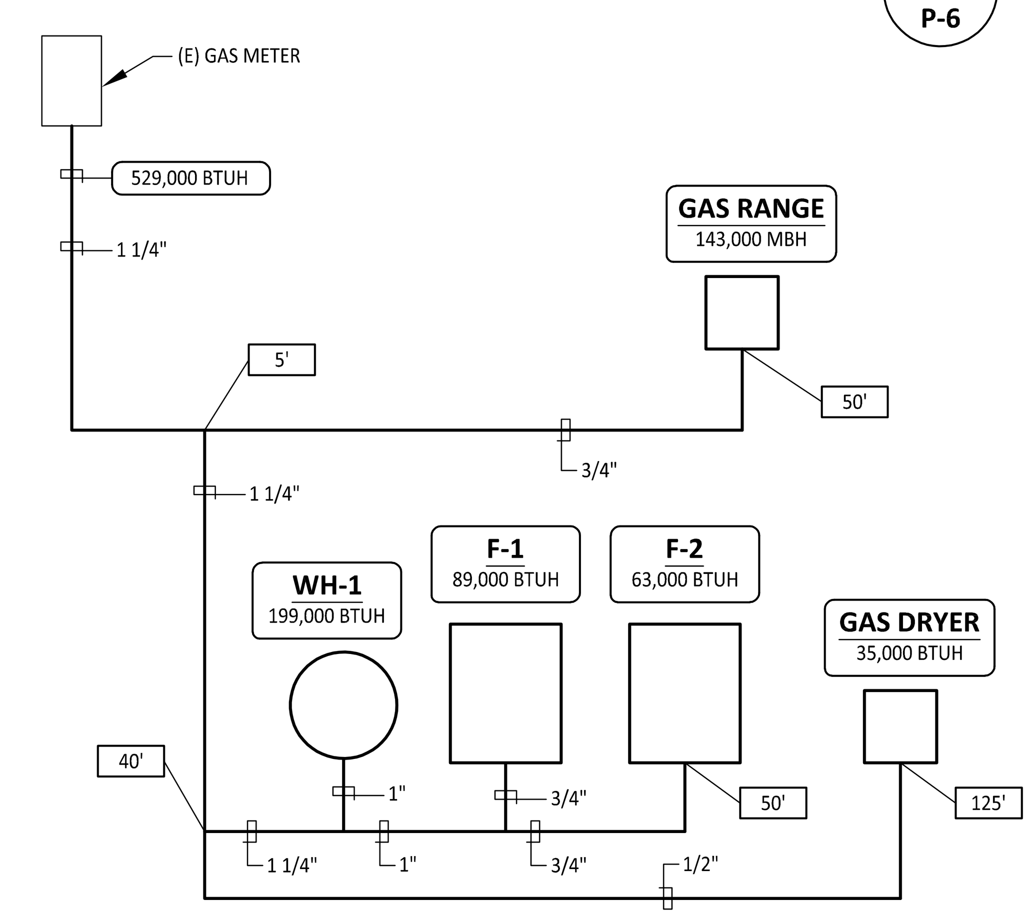

GAS PIPING SIZED PER
2019 CALIFORNIA PLUMBING CODE

LEGEND	
SYMBOL	DESCRIPTION
123'	PIPE DISTANCE
X-1 300,000 BTUH	EQUIPMENT NUMBER/ TOTAL BTUH FOR EQUIPMENT
300,000 BTUH	BRANCH TOTAL BTUH

3 / P-6 GAS SCHEMATIC

SCALE: NONE

REGISTERED PROFESSIONAL ENGINEER
WILLIAM M. ESTES
No. M24908
EXP. SEPT 30, 2021
MECHANICAL
STATE OF CALIFORNIA

ph. (831) 649-8000
fx. (831) 649-8038
www.axiomengineers.com
AXIOM ENGINEERS SM
CONSULTING ENGINEERS
AE Project # : 20190241
22 Lower Ragsdale Dr., Suite A
Monterey, California 93940-5788

JHW ARCHITECTS INC.
2400 GARDEN ROAD
SUITE C
MONTEREY, CA 93940
(831) 649-1701
FAX (831) 649-3072
www.jhwarch.com

PROJECT/OWNER

CASA DE NOCHE BUENA

FOR

COMMUNITY HUMAN SERVICES AND GATHERING FOR WOMEN

AT
BROADWAY & NOCHE BUENA
SEASIDE, CA

APN: 012-691-001,2,3

DRAWN BY: --

PRINT DATE:

DRAWING DATE: 01-30-2020

DATE ISSUED FOR CONSTRUCTION:

REVISIONS:
01/31/20 BID SET

SHEET TITLE:

DETAILS - PLUMBING

SHEET NUMBER:

P-6

THE USE OF THESE PLANS AND SPECIFICATIONS IS RESTRICTED TO THE SITE FOR WHICH THEY WERE PREPARED, AND PUBLICATION THEREOF IS EXPRESSLY LIMITED TO SUCH USE. RE-USE, REPRODUCTION OR PUBLICATION BY ANY METHOD IN WHOLE OR IN PART IS PROHIBITED. TITLE TO THE PLANS AND SPECIFICATIONS REMAINS WITH THE ARCHITECT, AND VISUAL CONTACT WITH THEM CONSTITUTES PRIMA FACIE EVIDENCE OF THE ACCEPTANCE OF THESE RESTRICTIONS.